SERVO DRIVE

SV-E3 SERIES INSTRUCTION MANUAL

Preface **3**
1. About the instruction manual 3
2. Confirm the following items before unpacking. 3
3. Safety precautions 3
1. Product introduction and model selection **7**
1.1 Introduction of nameplate and model name (For servo motor and drive) 7
1.2 Parts name of servo motor and drive 8
1.3 Model name of servo drive and motor 9
1.4 Model selection of peripheral braking resistor 10
1.5 Selection of cables and connector accessories for HNC ELECTRIC products 10
2. Product specifications **11**
2.1 Servo drive specifications 11
2.2 Motor specifications 16
3. Installation and size of servo motor and drive **24**
3.1 Installation environment conditions 24
3.2 Dustproof and waterproof 24
3.3 Installation method and space 24
3.4 Dimensions of servo motor 26
3.5 Dimensions of servo drive 30
4. Wiring explanation for servo motor and drive **31**
4.1 Wiring diagram 31
4.2 Drive connector and pins arrangement 33
4.3 Terminal arrangement and wiring color of motor connector 35
4.4 RS-485 communication wiring description 37
5. Panel display and operation **39**
5.1 Overview 39
5.2 Part names 39
5.3 Operation mode change 40
5.4 Status display mode 42
5.5 Alarm display mode 48
5.6 Parameter setting mode 50
5.7 Auto tuning mode 51
5.8 Parameter saving mode 53
5.9 Auxiliary function 54
6. Parameter Description **57**
6.1 Parameter list 57
6.2 Parameter list for point table 83
7. Timing chart **83**
7.1 Power ON 83
7.2 Servo OFF→ON 84

7.3 Servo stop 85
7.4 At occurrence of alarm 86
7.5 Alarm reset 88
8. Operation 89
8.1 Preface 89
8.2 Position control mode (Pulse position command input) 92
8.3 Speed control mode (Analog speed command input) 103
8.4 Speed control mode (Internal speed command) 108
8.5 Torque control mode (Analog torque command input) 112
8.6 Position control mode(Internal position command) 117
8.7 Description of User I/O connector (CN1) terminal arrangements 118
8.8 Adjustment 126
8.9 Home position return 132
9. Troubleshooting and countermeasures 154
9.1 Alarm display 154
9.2 Alarm handling and alarm reset 154
9.3 Troubleshooting 158
Appendix 161
Appendix 1 Recommended wire/cable 161
Appendix 2 SV-E3 positioner function 161
Appendix 3 SV-E3 special I/O setting 167
Appendix 4 Servo drive power connector （L1/ L2/B1/B2, U/ V/ W）wiring 169
Appendix 5 SV-E3 series absolute system description 170

Thank you for purchasing the HNC ELECTRIC products.

This Instruction Manual provides instructions for advanced use of the SV-E3 series servo motors.

●Before use, read this manual and manuals of relevant products fully to acquire proficiency in handling and operating the product.

●Please read the safety precautions before using.

●Store this manual in a safe place so that you can take it out and read it whenever necessary.

●As for products under development, specifications are subject to change without notice.

Preface

Incorrect operation and handling, couldn't have a full display of the various performance that designed, and may cause hazardous conditions and shorten the service life. Please operate the product correctly before you have read through the instruction manual correctly.

1. About the instruction manual

① We make an effort to perfect this instruction manual, but if you have found some mistakes or uncertain points, please contact HNC ELECTRIC at any time.

②Please note the following items on the instruction manual

●Danger exists as it's the high-voltage device.

●There are some residual voltage on the terminals or the units after power OFF and it is dangerous.

●High temperature locally

●Disassembling is prohibited.

③The product specifications and functions may change and increase, as the product performance upgraded. They are subject to change without notice.

④Plan to obtain the Certificate of safety specification for the product's device, please consult our sales representative.

⑤ To extend the service life of motor and drive, it is necessary to use it under the correct conditions. Please follow the instruction manual for details.

⑥The latest information should be recorded in the instruction manual and manual will be updated accordingly. If you need the latest version, please contact the HNC ELECTRIC distributor.

⑦Without the approval of company, it is forbidden to reprint some or all of the instruction manual.

2. Confirm the following items before unpacking.

●Check if the products are the ones you ordered.

●Check if there are some damage to the products during transportation.

●Any questions, please contact the HNC ELECTRIC distributor.

3. Safety precautions

Please pay attention to the flowing safety precautions anywhere and any time during acceptance inspection, installation, wiring, operation and maintenance.

DANGER Indicates that incorrect handling may result in death or severe injury.

CAUTION Indicates that incorrect handling may result in medium or slight personal injury or physical damage.

Indicates "Prohibitions"(Indicates what must not be done.)

Indicates "Forced".(Indicates what must be done.)

DANGER		
Installing and wiring		
	Do not connect the motor to the commercial power.	To prevent fire or malfunction.
	Do not place the combustibles around the servo motor and drive.	To prevent fire.
	Be sure to protect the drives through the case, and leave specified clearances between the case or other equipment and the drive.	To prevent electric shock, fire or malfunction.

	Install it at the place free from excessive dust and dirt, water and oil mist	To prevent electric shock, fire , malfunction or damage
	Install the equipment to incombustibles, such as metal.	To prevent fire.
	Any person who is involved in wiring and inspection should be fully competent to do the work.	To prevent electric shock.
	FG terminal of motor and drive must be grounded.	To prevent electric shock.
	Perform the wiring correctly after cut off the breaker.	To prevent electric shock, injury, malfunction or damage
	Have the insulation processing when connecting cables.	To prevent electric shock, fire or malfunction.
Operation and running		
⃠	During operation, never touch the internal parts of the drive.	To prevent burns or electric shock.
	The cables should not be damaged, stressed loaded, or pinched.	To prevent electric shock, malfunction or damage.
	During operation, never touch the rotating parts of the servo motor.	To prevent injury.
	Do not install the equipment under the conditions with water, corrosive and flammable gas.	To prevent fire.
	Do not use it at the location with great vibration and shock.	To prevent electric shock, injury or fire.
	Do not use the servo motor with its cable soaked in oil or water.	To prevent electric shock, malfunction or damage
	Operate the switches and wiring with dry hand.	To prevent electric shock, injury or fire.
	Do not touch the keyway directly when using the motor with shaft-end keyway	To prevent injury.
	Do not touch the motor and drive heat sink, as they are very hot.	To prevent burns or parts damaged.
	Do not drive the motor by external drive.	To prevent fire.
Other safety instructions		
!	Confirm the equipment's safety after the earthquake happens.	To prevent electric shock, injury or fire.
	Installing and setting correctly to prevent the fire and personal injury when earthquake happens.	To prevent injury, electric shock, fire, malfunction or damage.
	Provide an external emergency stop circuit to ensure that operation can be stopped and power switched off immediately.	To prevent injury, electric shock, fire, malfunction or damage.
	Before wiring or inspection, turn off the power and wait for 5 minutes or more.	To prevent electric shock.

⚠CAUTION		
Installing and wiring		
!	Please follow the specified combination of the motor and drive.	To prevent fire or malfunction.
	Do not touch the terminals of connector directly.	To prevent electric shock or malfunction.
	Do not block intake and prevent the foreign matters from entering into the	To prevent electric shock or fire.

	motor and drive.	
	Fix the motor and have the test run away from the mechanical system. After confirming the operation, the motor can be securely mounted to mechanical system.	To prevent injury.
	The servo motor must be installed in the specified direction.	To prevent injury or malfunction.
	Install the equipment correctly in accordance with its weight and rated output.	To prevent injury or malfunction.
Operation and running		
⃠	Do not climb or stand on servo equipment. Do not put heavy objects on equipment.	To prevent electric shock, injury, fault or damage.
	The parameter settings must not be changed excessively. Operation will be instable.	To prevent injury.
	When power is restored after an instantaneous power failure, keep away from the machine because the machine may be restarted suddenly (design the machine so that it is secured against hazard if restarted).	To prevent injury.
	Keep it away from the direct sunlight.	To prevent malfunction.
	Do not put strong impact on the motor, drive and motor shaft.	To prevent malfunction.
	The electromagnetic brake on the servo motor is designed to hold the servo motor shaft and should not be used for ordinary braking.	To prevent injury or malfunction.
❗	Do not install or operate a faulty servo motor or drive.	To prevent injury, electric shock or fire
	Check the power specification.	To prevent fault.
	The electromagnetic brake may not hold the servo motor shaft. To ensure safety, install a stopper on the machine side.	To prevent injury.
	A sudden restart is made if an alarm is reset with the run signal on.	To prevent injury.
	Connect the relay for emergency stop and for brake in series.	To prevent injury or malfunction.
Transportation and storage		
⃠	Do not subject the equipment to the place with rain, waterdrop, poisonous gases or liquids.	To prevent malfunction.
	Do not carry the servo motor by the cables, shaft or encoder during transportation.	To prevent injury or malfunction.
	Do not drop or dump the motor during transportation and installation.	To prevent injury or malfunction.
❗	Store the unit in a place in accordance with the instruction manual.	To prevent malfunction.
Other safety instructions		
❗	Please dispose the battery according to your local laws and regulations.	
	When disposing of the product, handle it as industrial waste.	
Maintenance and inspection		
⃠	Do not disassemble and/or repair the equipment on customer side.	To prevent malfunction.
	Do not turn on or switch off the main power frequently.	To prevent malfunction.
❗	Do not touch the servo drive heat sink, regenerative resistor, servo motor etc. Their temperatures may be high while power is on or for some time after power-off.	To prevent burns or electric shock.
	When the drive become faulty, switch off the control circuit and main power.	To prevent fire.

	If the servo motor is to be stored for a long time, switch off the power.	To prevent mis-operation and injury.

Warranty period

The term of warranty for the product is 18 months from the date of manufacture. It's exceptional to brake motors as they are warranted when acceleration / deceleration times is not beyond the specified service life.

Warranty coverage

This warranty applies only when the condition, method, environment, etc. of use are in compliance with the terms and conditions and instructions that are stated in the instruction manual and user manual for the Product.

However, even during warranty period, the repair cost will be charged on customer in the following cases.

1) A failure caused by improper storing or handling, repair and modification.

2) A failure caused by the parts which have dropped down or damaged during transportation

3) A failure caused when the products have been used beyond the product specification

4) A failure caused by external factors such as inevitable accidents, including but not limited to fire, earthquake, lightning stroke, windstorm disaster, flood, salt damage, abnormal fluctuation of voltage and other natural disaster.

5) A failure caused by the intrusion of water, oil, metal and other foreign matters.

The warranty coverage is only for the product itself. We assume no responsibilities for any losses of opportunity and/or profit incurred by you due to a failure of the Product.

1. Product introduction and model selection

1.1 Introduction of nameplate and model name (For servo motor and drive)

Servo motor nameplate

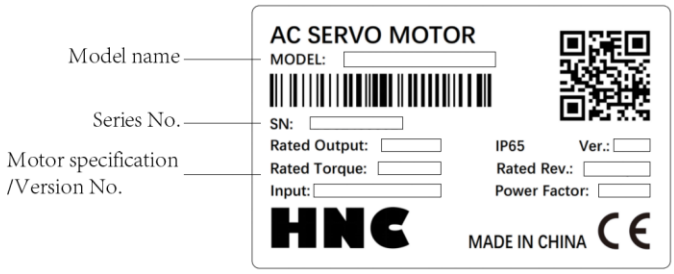

Servo driver nameplate

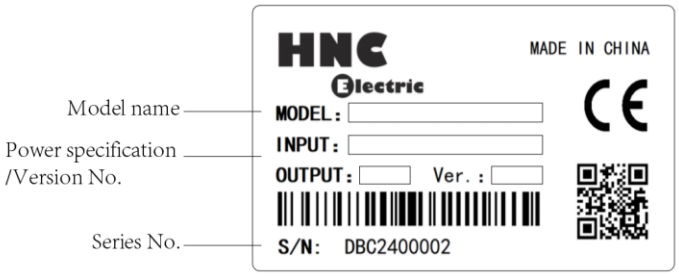

Model name

1) Servo motor

SE60 – 2 – 013 L 30 B – I1

SE series	Power supply	Inertia	Inertia	Rated speed	Brake	Encoder
Flange size:	2 AC220V	002 0.16N.m	L Low	20 2000rpm	B Brake	I1 Incremental 17bits
40mm	4 AC380V	003 0.32N.m	M Medium	30 3000rpm	Null No brake	A1 Absolute 17bits
60mm		006 0.64N.m	H High			
80mm		013 1.27N.m				
130mm		024 2.39N.m				
		048 4.76N.m				
		072 7.15N.m				
		095 9.45N.m				

Detailed explanation of model naming, take SE60-2-013L30B-I1 as example：

“SE” is motor series, “60” is motor flange size, “2”is AC220V,

“013 ” means rated torque is 1.27NM. “M” meas middle inertia, “30” means rated speed is 3000rpm,

“B” means with brake, “I1 means” incremental 17bits encoder

2) Servo drive

SV-E3 P 005 A 2 -B

Series name

Pulse/Bus	
Type	Pulse/Bus
p	Pulse
B	Bus

Rated power	
Type	Output
005	50W
010	100W
020	200W
040	400W
075	750W
100	1000W
150	1500W
200	2000W

Voltage type	
Type	Voltage type
A	Alternat current
D	Direct current

Version	
Type	Version
A	Standard
B	Classic

Voltage	
Type	Voltage
2	220V
3	380V
4	48V
8	80V

1.2 Parts name of servo motor and drive

Figure 1.1.4 Parts name of servo motor

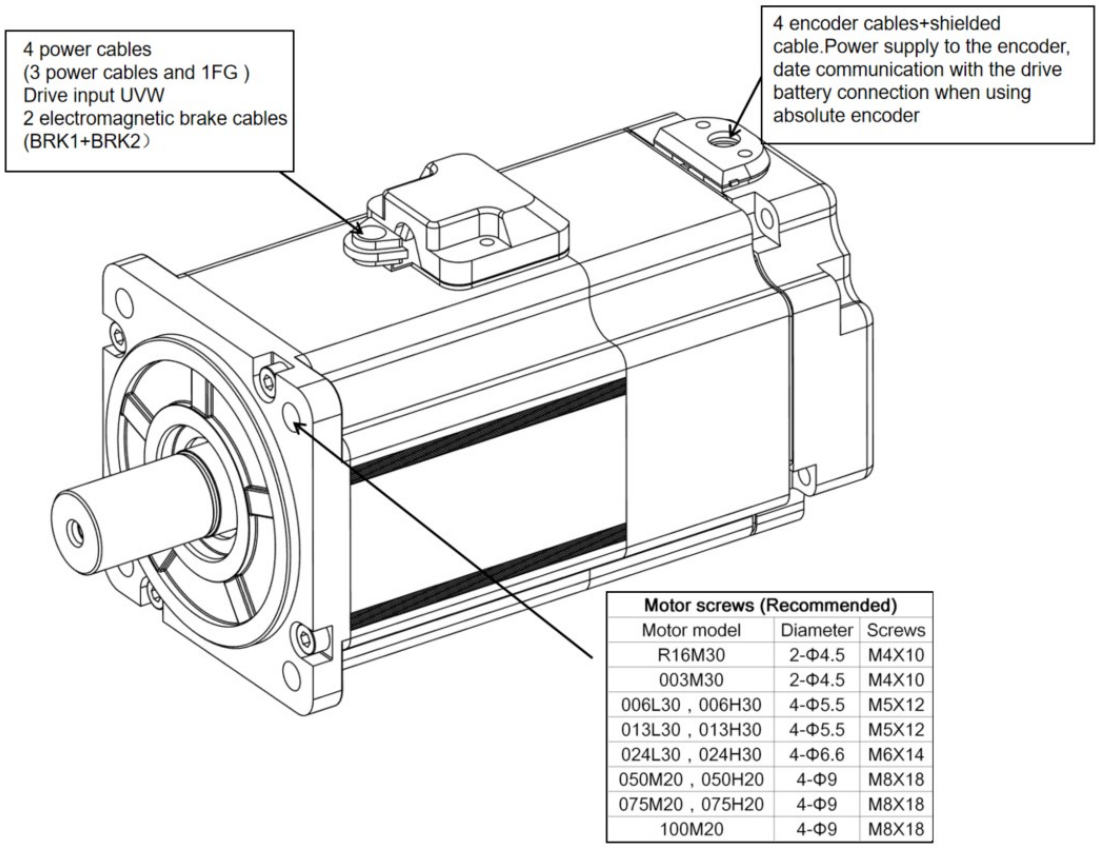

Motor screws (Recommended)		
Motor model	Diameter	Screws
R16M30	2-Φ4.5	M4X10
003M30	2-Φ4.5	M4X10
006L30 , 006H30	4-Φ5.5	M5X12
013L30 , 013H30	4-Φ5.5	M5X12
024L30 , 024H30	4-Φ6.6	M6X14
050M20 , 050H20	4-Φ9	M8X18
075M20 , 075H20	4-Φ9	M8X18
100M20	4-Φ9	M8X18

Figure 1.1.5 Parts name of servo drive

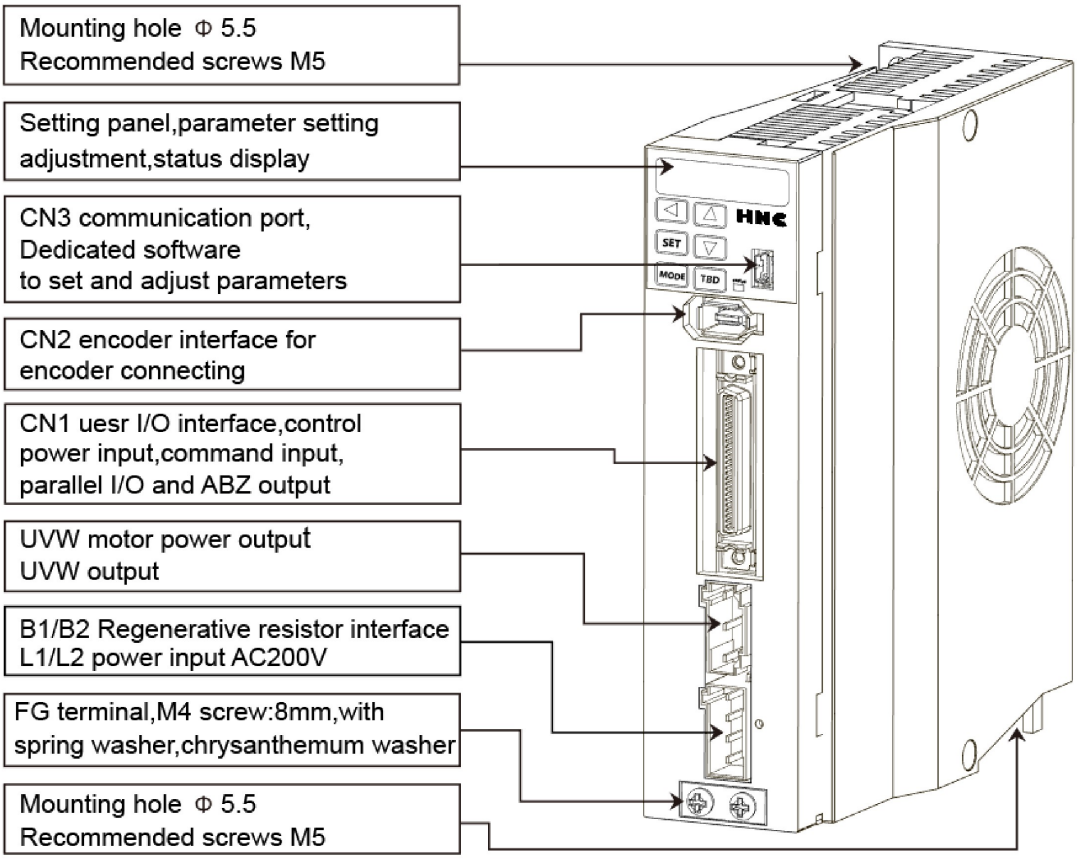

1.3 Model name of servo drive and motor

Capacity	Motor model SE□□□-2-□□□□□□-A1		Motor size (Flange installation size)	Drive model	Drive size
50W	Middle inertia	R16M30	40	SV-E3P005A-A	Frame A
100W	Middle inertia	003M30		SV-E3P010A-A	
200W	Low inertia	006L30	60	SV-E3P020A-A	
	High inertia	006H30			
400W	Low inertia	013L30		SV-E3P040A-A	
	High inertia	013H30			
750W	Low inertia	024L30	80	SV-E3P075A-A	
	High inertia	024H30			
1kW	Middle inertia	050M20	130	SV-E3P100A-A	Frame B
	High inertia	050H20			
1.5kW	Middle inertia	075M20		SV-E3P150A-A	
	High inertia	075H20			
2kW	Middle inertia	100M20		SV-E3P200A-A	

1.4 Model selection of peripheral braking resistor

Rated output	50W	100W	200W	400W	750W	1kW	1.5 kW	2 kW
Resistance	40～50Ω	40～50Ω	40～50Ω	40～50Ω	40～50Ω	30Ω	30Ω	20Ω
Allowable power	20W	20W	20W	20W	20W	40W	40W	60W

The Status monitoring mode on the setting panel can be used to confirm whether a regenerative resistor is needed. Select 「St_REG」on the setting panel to display 「in00_-」. When the display changes from 「in00_-」 to 「in00_A」, it means the regenerative resistor is needed. For details, refer to [5.4 Status display mode [Regenerative resistor]].

Starting from low speed operation (20% of the max. speed) to the desired operation and observing if the display value changes from 「in00_-」 to 「in00_A」 If 「in00_A」displays, a regenerative resistor is needed.

If the regenerative resistor is needed, refer to the installation of regenerative resistor. The use of regenerative resistor cannot necessarily guarantee the performance. When heating temperature is too high, please increase the resistance, or the permissible power.

1.5 Selection of cables and connector accessories for HNC ELECTRIC products

- **For 750W or less**

Items	**Usage**	**Model name**	**Remark**
1	Connector for drive and motor	Power connector (CON-4P-M75A for 750W or less)	
2	Power cable	SV-E3-CAB-SE60-PWR-T-R50M	Length: 0.5m
		SV-E3-CAB-SE60-PWR-T-1R5M	Length: 1.5m
		SV-E3-CAB-SE60-PWR-T-3M	Length: 3m
		SV-E3-CAB-SE60-PWR-T-4M	Length: 4m
		SV-E3-CAB-SE60-PWR-T-5M	Length:5m
		SV-E3-CAB-SE60-PWR-T-6M	Length:6m
		SV-E3-CAB-SE60-PWR-T-7M	Length:7m
		SV-E3-CAB-SE60-PWR-T-10M	Length: 10m
3	Brake connector	CON-2P-BK (for 750W or less)	
4	Encoder cable terminal	SM-6P+172160-1 (for 750W or less)	
5	Encoder cable	SV-E3-CAB-SE60-ENC-T-R50M	Length: 0.5m
		SV-E3-CAB-SE60-ENC-T-1R5M	Length: 1.5m
		SV-E3-CAB-SE60-ENC-T-3M	Length: 3m
		SV-E3-CAB-SE60-ENC-T-5M	Length:5m
		SV-E3-CAB-SE60-ENC-T-10M	Length: 10m
6	Encoder cable for absolute （Integrated battery box）	SV-E3-CAB-SE60-BOX-T-R30M	Length: 0.3m

● **1KW or more**

Items	Usage	Model name	Remark
1	Connector for drive and motor	Power connector (CON-4P-M100A for 1KW or more)	
2	Power cable	SV-E3-CAB-SE130-PWR-T-R50M	Length: 0.5m
		SV-E3-CAB-SE130-PWR-T-1R5M	Length: 1.5m
		SV-E3-CAB-SE130-PWR-T-3M	Length: 3m
		SV-E3-CAB-SE130-PWR-T-5M	Length:5m
		SV-E3-CAB-SE130-PWR-T-10M	Length: 10m
3	Brake connector	SM10-AP2S-S-C (for 1KW or more)	
4	Encoder cable terminal	SM-6P+SM10-SP10S-M-C (for 1KW or more)	
5	Encoder cable	SV-E3-CAB-SE130-ENC-T-R50M	Length: 0.5m
		SV-E3-CAB-SE130-ENC-T-1R5M	Length: 1.5m
		SV-E3-CAB-SE130-ENC-T-3M	Length: 3m
		SV-E3-CAB-SE130-ENC-T-5M	Length:5m
		SV-E3-CAB-SE130-ENC-T-10M	Length: 10m
6	Encoder cable for absolute （Integrated battery box）	SV-E3-CAB-SE130-BOX-T-R30M	Length: 0.3m
7	50P pulse connector	Pulse connector CON-50P	

2. Product specifications

2.1 Servo drive specifications

2.1.1 Common specifications

Table 2.1.1 Common specifications

Items			Specification							
Model Name SV-E3P□□□-A			005	010	020	040	075	100	150	200
Common specification	Applicable motor		50W	100W	200W	400W	750W	1kW	1.5kW	2kW
	Dimension W(mm)		40			48		61		
	H(mm)		160			160		160		
	D(mm)		135			135		175		
	Weight(Kg)		0.7			0.8		1.5		
	Input power	Main circuit power	Single-phase 200～240V ±10% 50/60Hz [Note] For the control power, refer to Note 1.					Three-phase 200～240V ±10% 50/60Hz		
		Control power	D3P: DC24V±10% 260mA (Typ.)/Inrush current is excluded.					I/O power supply:24VDC±10% 100mA The power is supplied from internal.		
	Control type		Three-phase PWM inverters sine-wave driven							
	Output spec.	Current (Arms)	0.6	0.9	1.7	2.7	4.3	5.6	9.9	12.2

		Frequency(Hz)	0 ~ 400	0~333	0~300	0~250
	Encoder feedback		17-bit serial incremental/ absolute encoder			
	Control signal	Input	8 points (24VDC, photocoupler insulation) Switched under control mode			
		Output	8 points (24VDC, photocoupler insulation , open-collector circuit output) Switched under control mode			
	Analog signal	Input	1 point (±10V) Switched under control mode			
	Pulse signal	Input	RS-422 differential, open-collector circuit			
		Output	A/B/Z-phase RS-422 differential Open collector output enabled only for Z-phase alone.			
	Communication function		USB: Connection with PC RS-485: remote upper control communication (support multi-station)			
	Regeneration function		External regenerative resistor possible (Note 2)			
	Dynamic brake		None(Note 3)			
	Control mode		Position control, internal position control, speed control, internal speed control, torque control			

Function	Position control	Control input		Servo ON, alarm reset, command input prohibition, deviation counter clear, torque limit selection, CCW/CW drive prohibition
		Control output		Alarm state, servo ready, positioning complete, brake release, servo state, torque limit output
		Pulse input	Maximum command pulse frequency	RS-422 differential：4Mpps Open collector: 200kpps
			Input pulse signal form	Pulse+ direction, A-/B-phase orthogonal phase difference pulse, CW+CCW pulse(note 4)
			Command pulse multiplication	A/B A : 1～65535 B : 1～65535 1/1000 < A/B < 1000
			Smoothing	FIR filter
		Pulse output	Output pulse signal format	Encoder position pulse is output in the following manner: A-/B-phase orthogonal phase difference pulse and Z-phase pulse is output in RS-422 differential format, Z-phase pulse is output through open collector
	Internal position control	Control input		Servo ON, alarm reset, deviation counter clear, CW start, point selection 1, point selection 2, point selection 3, point selection 4, home position sensor input
		Control output		Alarm state, servo ready, brake release, servo state, torque limit output, operation completion, home position reset completion
		Operation mode		Point table, communication operation, manual input pulse
		Pulse output	Output pulse signal format	Encoder position pulse is output in the following manner: A-/B-phase orthogonal phase difference pulse and Z-phase pulse is output in RS-422 differential format, Z-phase pulse is output through open collector
	Speed control	Control input		Servo ON, alarm reset, command inhibited(Zero speed clamp), torque limit selection 2, CCW/CW rotation prohibition
		Control output		Alarm state, servo ready, brake release, servo ON, torque limit output

		Analog input	Speed command input	Input voltage -10V to +10V (Maximum speed occurs at ±10V)
			Smoothing	IIR filter, FIR filter
		Pulse output	Output pulse signal format	Encoder position pulse is output in the following manner: A-/B-phase orthogonal phase difference pulse and Z-phase pulse is output in EIA-422 differential format, Z-phase pulse is output through open collector
	Internal speed control	Control input		Servo ON, alarm reset, internal speed command –start 1 &2, internal speed command 8-phases, torque limit selection 2
		Control output		Alarm state, servo ready, brake release, servo ON, torque limit output
		Pulse output	Output pulse signal format	Encoder position pulse is output in the following manner: A-/B-phase orthogonal phase difference pulse and Z-phase pulse is output in EIA-422 differential format, Z-phase pulse is output through open collector
	Torque control	Control input		Servo ON, alarm reset, command input prohibition(zero torque command), torque limit 2, CCW/CW drive prohibition
		Control output		Alarm state, servo ready, brake release, servo state, torque limit output
		Pulse output	Output pulse signal format	Encoder position pulse is output in the following manner: A-/B-phase orthogonal phase difference pulse and Z-phase pulse is output in EIA-422 differential format, Z-phase pulse is output through open collector
	Common	Robust observer		Provided
		Vibration control		Provided
		Auto-tuning		Provided
		Encoder output division and multiplication		Provided
		Tuning/function setting		Adjusted via software
		Protective function	Hardware alarm	overvoltage, power supply error, overcurrent, overtemperature, overload(refer to subsection 2,1,1 overload detection description), encoder error
			Software alarm	overspeed, too much position deviation, parameter error

Environmental specifications	Temperature	Ambient temperature for use	0～55° C(Note 5, Note 6)
		Ambient temperature for storage	-20～65° C
	Humidity	Ambient humidity for use	20～85%RH or less(Without condensation)
		Ambient humidity for storage	20～85%RH or less(Without condensation)
	Atmosphere for use& storage		Indoors(Not subject to direct sunlight); free from corrosive gas, flammable gas, oil mist, or dust
	Altitude		1000m or less above sea level
	Vibration		5.8m/s²(0.6G) or less, 10～60Hz(No continuous operation allowed at frequency of resonance)
Dielectric strength			1 minute at 1500 VAC across the primary and FG
Points to note			Grounding is mandatory. Class Ⅰ relevant products
			”Over voltage category Ⅱ” relevant products
			“Pollution degree2” relevant products

Note 1) 24VDC external power supply, as the control power, should meet the following specifications.

1. Use SELV power.

※SELV power: Safety Extra Low Voltage

Reinforced insulation is needed for safety extra low voltage, non-dangerous voltage and dangerous voltage

As the overcurrent protection for drive failure, please select the power supply of 100W or less.

Current consumption is the value of I/O signal without the connection of servo ON.

Increase the current consumption for the I/O signal occupied points in the actual usage.

Note 2) The installation of regenerative resistor can be confirmed by the set panel.

1. Select [St_REG] in the Status Display mode.

2. Show the regenerative state [rn00_-]

3. When the device reaches the actual working speed from the low speed (about 20% of the highest speed), confirm the set panel display is changed to [rn00_A]

4. When the panel changes to [rn00_A], install the regenerative resistor according to [table 1.4.1 Model selection of peripheral braking resistor].

5. The regenerative resistor value in table 2-2-2 cannot guarantee the performance. If the heating temperature is too high, please choose the large and high power resistor.

Note 3) The brake is the dynamic brake function controlled by the software.

The brake function becomes invalid when the drive failure occurs or the power supply disconnect.

Note 4) Pulse command input is shown below.

Table 2.1.2

Parameter No.32.0 pulse command input mode	Input signal	Signal name	The minimum necessary time range (t1, t2, t3, t4, t5, t6)	
			Positive direction	Negative direction
0 (Initial value)	Pulse • direction Command pulse	Pulse CMD_PLS Direction CMD_DIR	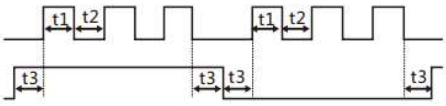	
1	AB-phase orthogonal phase pulse	A-phase CMD_PLS B-phase CMD-DIR	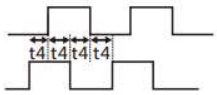	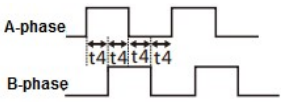
2	Positive direction pulse Negative direction pulse	CCW CMD-PLS CW CMD-DIR	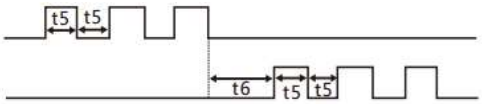	

■Max. pulse frequency and minimum pulse width of command input pulse signal.

Input pulse signal I/F	Max. pulse frequency	The minimum necessary time [μs]					
		t1	t2	t3	t4	t5	t6
Differential interface	4Mpps	0.125	0.125	2.5	0.25	0.125	0.125
Open collector circuit interface	200kpps	2.5	2.5	2.5	5.0	2.5	2.5

※The rise and fall time of command pulse input signal should be 0.1μs or less.

※The pulse is counted from Low to High.

※Pulse command input filter selection(No.33.0) should be set according to the input frequency.

Note 5) Use the screws to fix the drive by the mounting holes according to section 3 [Installation direction and space] to leave enough space to prevent high temperature.

Note 6) Ambient temperature for 2kW drive(Model name: SV-E3)

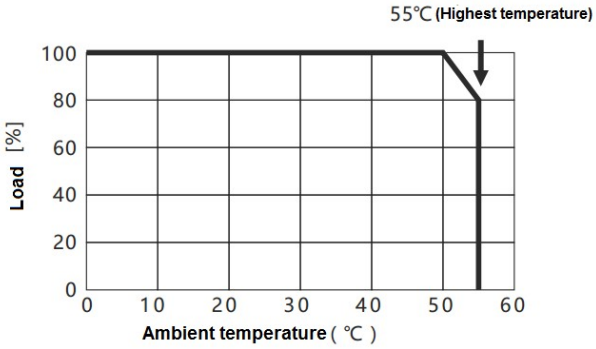

2.1.2 Overload detection characteristics

For SV-E3 series servo drives, when the motor torque exceeds the torque values in the overload detection characteristics, overload protection will start which outputs overload alarm and the motor stops emergently.

Figure 2.1.1 Overload detection characteristics

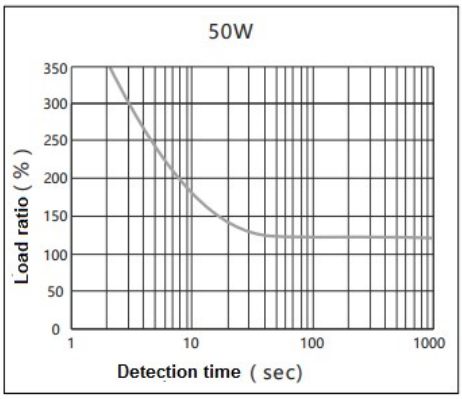

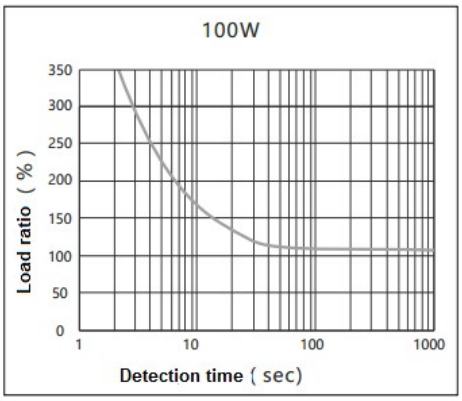

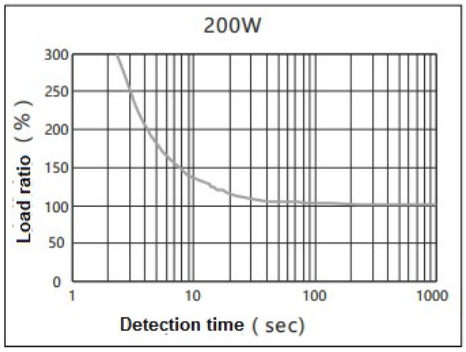

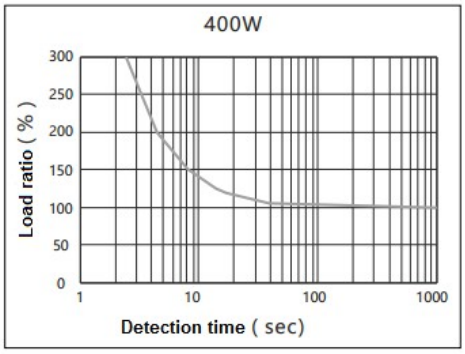

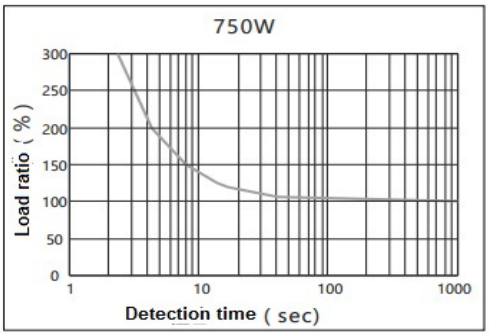

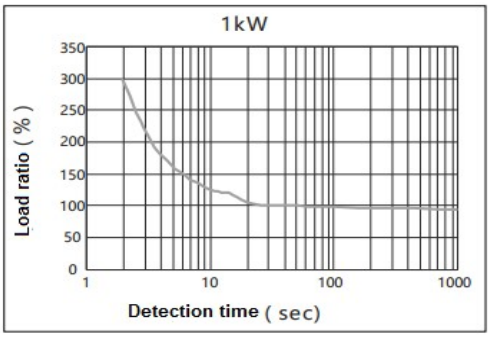

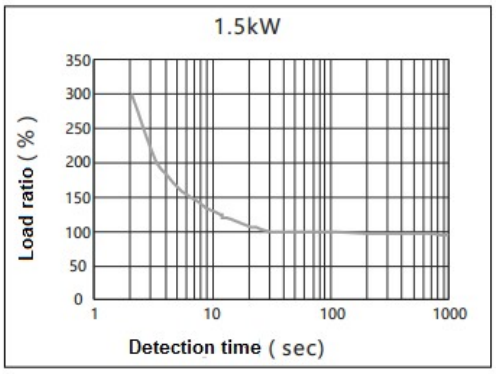

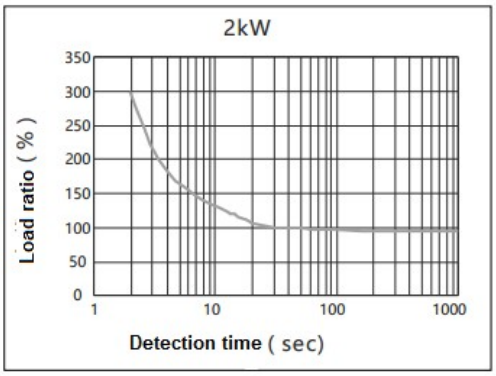

2.2 Motor specifications

2.2.1 Common specifications

Table 2.2.1 Common specifications

200V~230V AC								
Items		**Unit**	**Specifications**					
Voltage		V	280VDC					
Model name (SE□□-2-□□□□□□-□□)		-	002M30 Middle inertia	003M30 Middle inertia	006L30 Middle inertia	006H30 High inertia	013L30 Low inertia	013H30 High inertia
Flange installation size		mm	□40	□40	□60			
Mass	Without brake	kg	0.4	0.5	0.9	1.0	1.3	1.5
	With brake		0.6	0.8	1.4	1.5	1.8	2.0
Common speci.	Rated output	W	50	100	200		400	
	Rated torque	N·m	0.16	0.32	0.64		1.27	
	Max. instantaneous torque	N·m	0.56	1.12	1.91		3.82	
	Rated current	Arms	0.6	0.9	1.7		2.7	
	Max. instantaneous current	Arms	2.1	3.2	5.1		8.1	
	Rated speed	r/min	3000		3000			
	Max. speed	r/min	6000		5000			
	Torque constant	N. m/Arms	0.25	0.36	0.417		0.498	
	Induced voltage constant of each phase	MV(r/min)	8.8	12.5	14.5		17.4	

	Rated power change rate	Without brake	kW/s	5.6	13.6	23.9	9.3	58.7	23.5
		With brake		4.7	12.3	19.5	8.6	51.9	22.4
	Mechanical time constant	Without brake	ms	2.60	1.69	1.12	2.87	2.60	1.66
		With brake		3.06	1.87	1.37	3.12	0.75	1.75
	Electrical time constant		ms	0.64	0.76	1.99		2.47	
	Motor rotor Inertia	Without brake	×10kg·m^2	0.045	0.074	0.17	0.43	0.28	0.70
		With brake		0.053	0.082	0.21	0.47	0.31	0.74
	Permissible load	Radial load	N	Refer to [2.2.2 Output shaft permissible load]					
		Axial load	N						
	Encoder		17 bit serial communication (EIA422)						

Encoder specifications	Usage	Holding(Note: not for braking)			
	Power supply	-	SELV power, reinforced insulation should be performed from the dangerous voltage.		
	Rated voltage	V	DC24V±10%		
	Rated current	A	0.25		0.3
	Static friction torque	N·m	0.16 or more	0.32 or more	1.27 or more
	Absorption time	ms	35 or less		50 or less
	Release time	ms	20 or less		15 or less
	Release voltage	V	1VDC or more		

Ambient conditions	Rated time	Continuous
	Ambient temperature for use	0～40℃(Without condensation)
	Ambient humidity for use	20～85%RH(Without condensation)
	Ambient temperature for storage	-20～65℃(Highest temperature guaranteed: 80 degrees, 72hours)
	Ambient humidity for storage	20～85%RH (Without condensation)
	Atmosphere for use/storage	Indoors(Not subject to rainwater or direct sunlight); free from corrosive gas, flammable gas, flammables, grinding fluid, oil mist, or dust
	Insulation class	Class B
	Insulation resistance	1000 VDC megger 5MΩ or more
	Dielectric strength	1500 VAC for 1 minute
	Altitude	1000m or less above sea level
	Vibration class	V 15(JEC2121)
	Vibration resistance	49 m/s^2 (5G)
	Impact resistance	98 m/s^2 (10G)
	Protective class	IP65
Points to note		Grounding is mandatory. Class Ⅰ relevant products
		”Over voltage category Ⅱ” relevant products
		“Pollution degree2” relevant products
		Brake lines have polarity. Red: connected with +24V. Black: connected with GND,

200V~230V AC										
Items			**Unit**	**Spec.**						
Voltage			V	280VDC						
Model name (SE□□-2-□□□□□□-□□)			-	024L30 Low inertia	024H30 High inertia	048M20 Middle inertia	048H20 High inertia	072M20 Middle inertia	075H20 High inertia	095M20 Middle inertia
Flange installation size			mm	□80		□130				
Mass		Without brake	kg	2.5	2.7	5.6	7.6	7.0	9.0	8.4
		With brake		3.3	3.5	7.0	9.0	8.4	10.4	9.8
Common specifications	Rated output		W	750		1000		1500		2000
	Rated torque		N·m	2.39		4.77		7.16		9.45
	Max. instantaneous torque		N·m	7.1		14.3		21.5		28.6
	Rated current		Arms	4.3		5.6		9.9		12.2
	Max. instantaneous current		Arms	12.9		16.8		30		36.6
	Rated speed		r/min	3000		2000				
	Max. speed		r/min	4500		3000				
	Torque constant		N．m/Arms	0.61		0.88		0.81		0.85
	Induced voltage constant of each phase		MV(r/min)	21.33		30.9		28.4		29.6
	Rated power change rate	Without brake	kW/s	64.1	35.9	50.0	9.2	76.9	13.8	104.9
		With brake		52.8	32.1	36.5	8.6	61.4	13.3	87.9
	Mechanical time constant	Without brake	ms	0.53	0.94	0.76	4.17	0.60	3.32	0.58
		With brake		0.64	1.06	1.05	4.43	0.75	3.46	0.69
	Electrical time constant		ms	4.3		10.1		12.2		8.2
	Motor rotor Inertia	Without brake	×10kg·m²	0.89	1.62	4.56	24.9	6.67	37.12	8.70
		With brake		1.08	1.81	6.24	26.4	8.35	38.65	10.38
	Permissible load	Radial load	N	Refer to [2.2.2 Output shaft permissible load]						
		Axial load	N							
	Encoder		17 bit serial communication (EIA422)							
E	Usage		Holding(Note: not for braking)							

	Power supply	-	SELV power, reinforced insulation should be performed from the dangerous voltage.	
	Rated voltage	V	DC24V±10%	
	Rated current	A	0.4	1.0
	Static friction torque	N·m	2.39 or more	9.55 or more
	Absorption time	ms	70	120
	Release time	ms	20	30
	Release voltage	V	1VDC or more	
Ambient conditions	Rated time	Continuous		
	Ambient temperature for use	0～40℃(Without condensation)		
	Ambient humidity for use	20～85%RH(Without condensation)		
	Ambient temperature for storage	-20～65℃(Highest temperature guaranteed: 80 degrees, 72hours)		
	Ambient humidity for storage	20～85%RH (Without condensation)		
	Atmosphere for use/storage	Indoors(Not subject to rainwater or direct sunlight); free from corrosive gas, flammable gas, flammables, grinding fluid, oil mist, or dust		
	Insulation class	Class B		
	Insulation resistance	1000 VDC megger 5MΩ or more		
	Dielectric strength	1500 VAC for 1 minute		
	Altitude	1000m or less above sea level		
	Vibration class	V 15(JEC2121)		
	Vibration resistance	49 m/s^2 (5G)		
	Impact resistance	98 m/s^2 (10G)		
	Protective class	IP65		
Points to note		Grounding is mandatory. Class Ⅰ relevant products		
		”Over voltage category Ⅱ” relevant products		
		“Pollution degree2” relevant products		
		Brake lines have polarity. Red: connected with +24V. Black: connected with GND,		

2.2.2 Output shaft permissible load

Figure 2.2.1 Output shaft permissible load

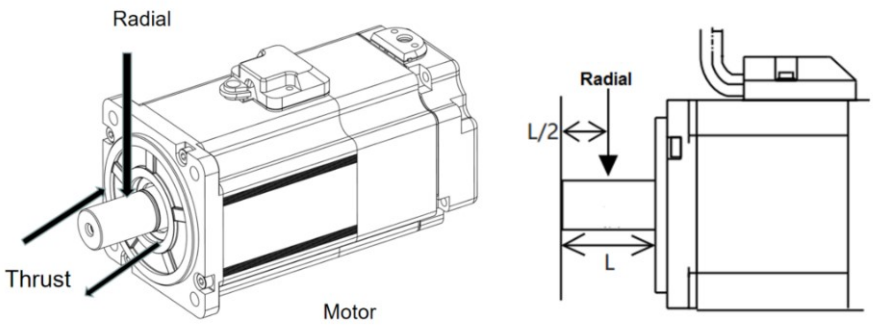

Permissible load	Unit	50W	100W	200W	400W	750W	1kW	1.5kW	2kW
Permissible radial load	N	68	68	245	245	392	490	490	490
Permissible axial load	N	58	58	98	98	147	196	196	196

2.2.3 N-T characteristics

Figure 2.2.2 N-T characteristics

■ 50W

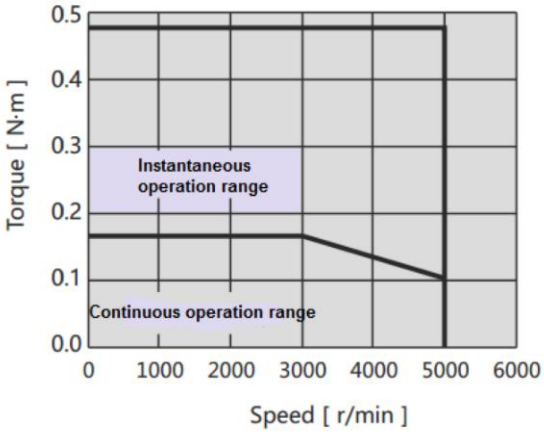

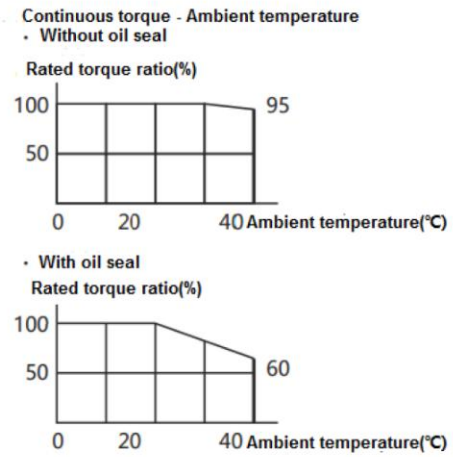

■ 100W

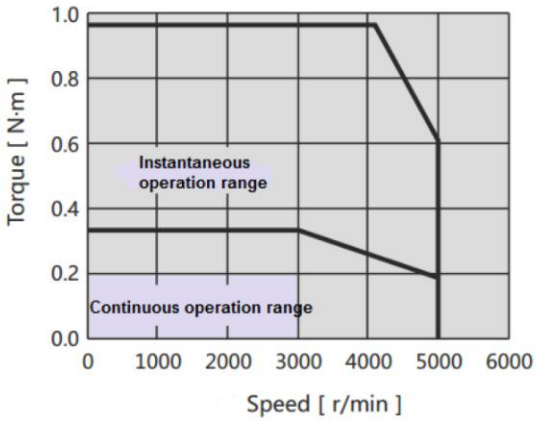

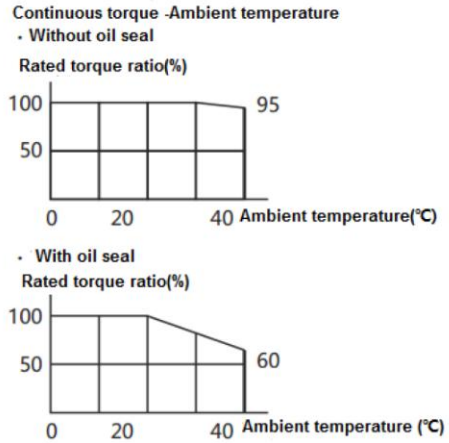

■ 200W

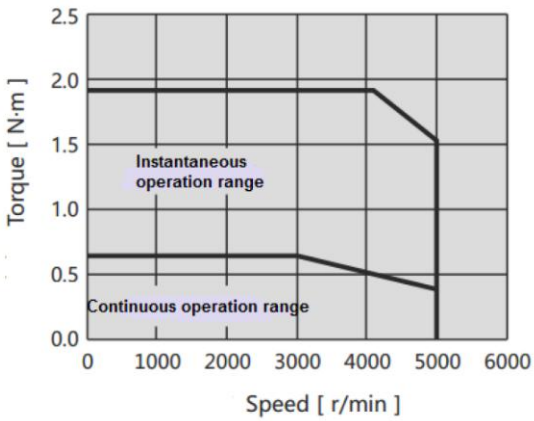

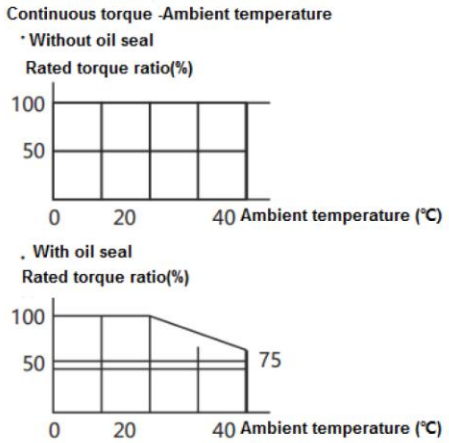

■ 400W

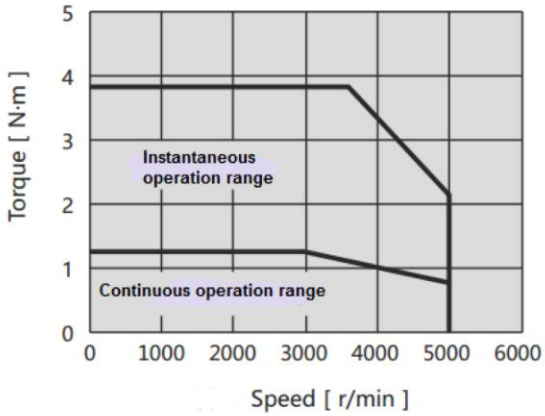

Continuous torque -Ambient temperature

- Without oil seal

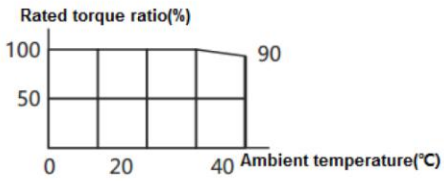

- With oil seal

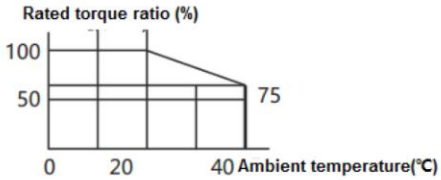

■ 750W

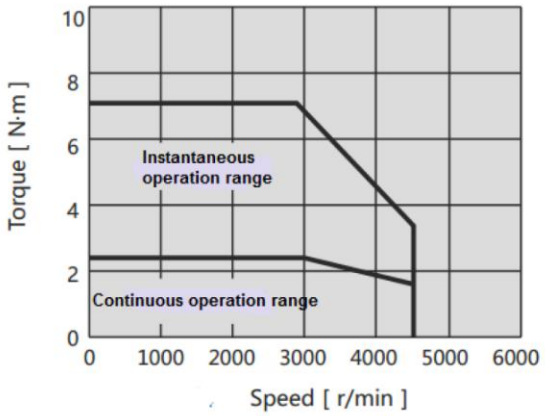

Continuous torque -Ambient temperature

- Without oil seal

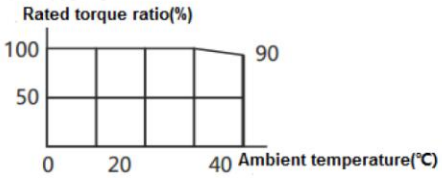

- With oil seal

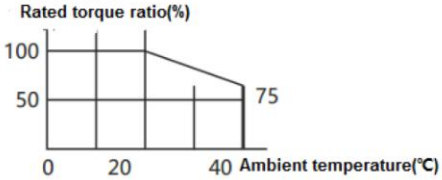

■ 1000W

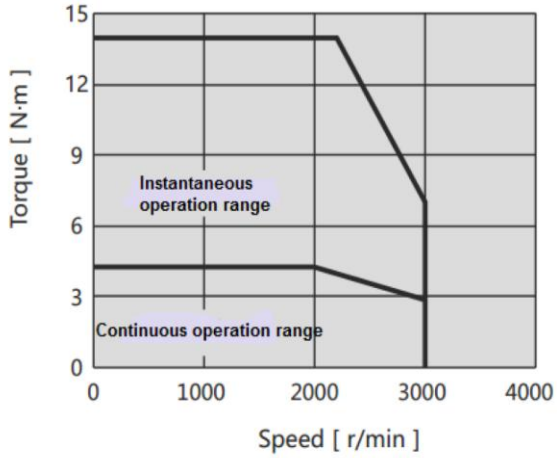

Continuous torque-Ambient temperature

- Without oil seal

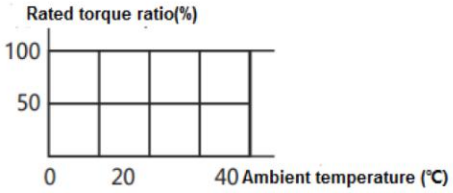

- With oil seal

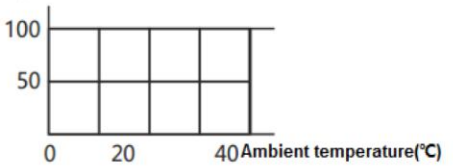

■ 1500W

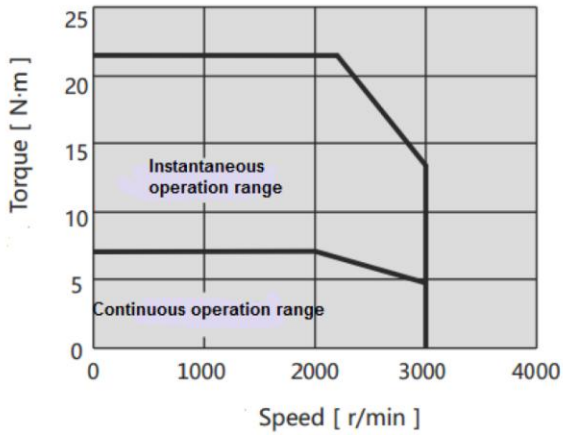

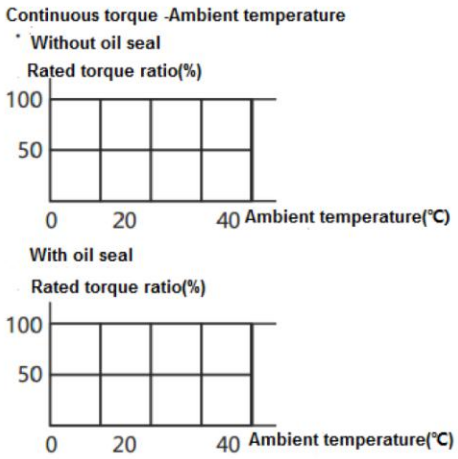

■ 2000W

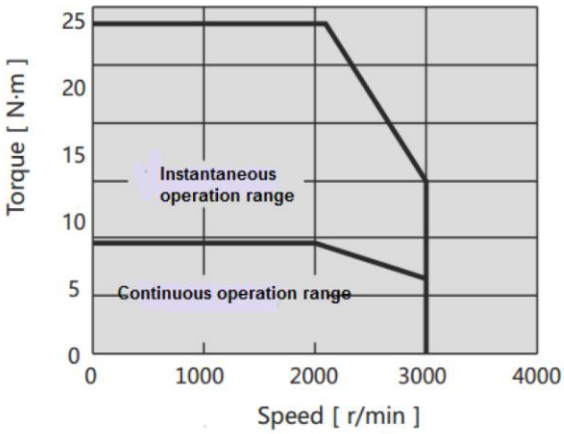

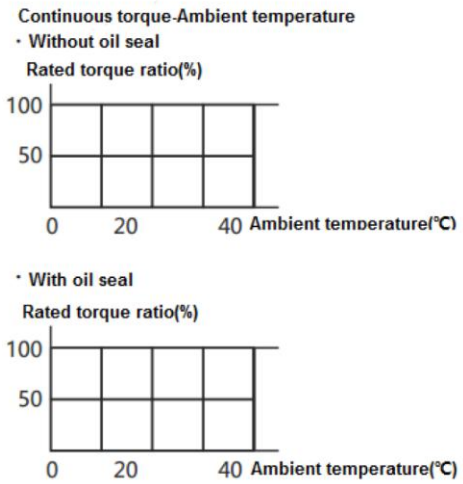

2.2.4 Encoder specifications

Table 2.2.3 Encoder specifications

Items	Description		Remarks
Motor Model Name	SE□□-2-□□□□□□□-I1(17 bit)	SE□□-2-□□□□□□□-A1(17 bit)	-
Power supply voltage VCC	DC 4.5V～5.5V		Ripple voltage 5% or less
External power supply BAT	-	DC 2.4V～5.5V	-
External capacitor CAP	-	DC 2.4V～5.5V	-
Current consumption	160mA(Typ.)		Inrush current are excluded.
State of low power consumption	-	Typ 10μA	The battery voltage is 3.6V at motor stop at room temperature

Single revolution resolution	Absolute 131,072(17bit）		-
Multi-revolution count	-	65,536 Count	-
Maximum speed	6,000 r/min		-
Input/ Output form	Differential transmission		-
Count-up direction	CCW		-

Table 2.2.4

Item	**Description**	
Motor Model Name	SE□□-2-□□□□□□□-I1(17 bit)	SE□□-2-□□□□□□□□-A1(17bit)
Transmission method	Half-duplex asynchronous serial communication	
Communication speed	2.5Mbps	

Table 2.2.5

Item	**Description**
Working temperature	0~85℃
Resistance to external magnetic field	±2mT(20G) or less

Note 1) Up-counting direction

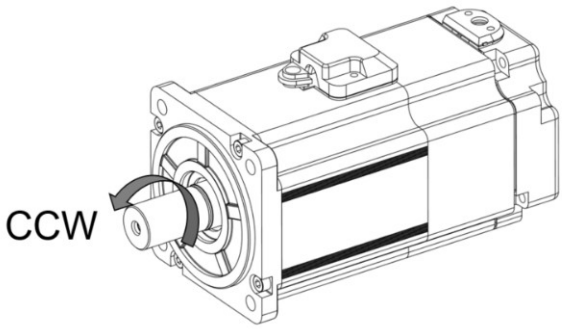

※Look from the front flange, rotate as counterclockwise, that is CCW.

[Note]

※When the motor rotates under 180 degree, single revolution accuracy decreases.

※When use the motor with brake, please follow the brake voltage specified in the manual.

※When the brake voltage is under 12V or use under the reverse polarity, single revolution accuracy decreases.

2.2.5 About oil seal

Please use oil seal to prevent the entry of oil into the servo motor via the output shaft when using motor with gear box. All the SV-E3 series motors are installed with the oil seal.

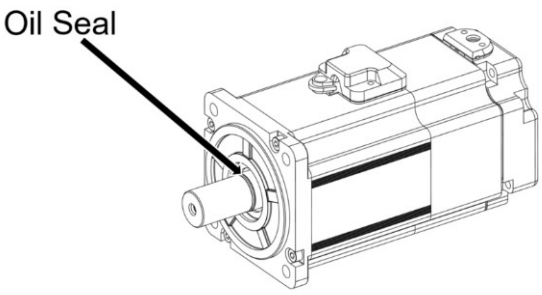

3. Installation and size of servo motor and drive

3.1 Installation environment conditions

About the environmental conditions, make sure to follow the company's instructions. If you need to use the product outside the scope of the environmental conditions, please consult HNC ELECTRIC Corporation in advance.

① Keep it away from the direct sunlight.

② Drive must be installed in the cabinet.

③ Keep it away from the water, oil (cutting oil, oil mist) and moisture.

④ Do not install the equipment under the conditions with water, corrosive and flammable gas.

⑤ Free from the dust, iron powder, cutting powder and so on.

⑥ Keep it away from the area with high temperature, excessive vibration and shock.

3.2 Dustproof and waterproof

The servo drive is non-waterproof structure. Protection level of motor (excluding the connector) is IP65 according to IEC 34-5(International Electrotechnical Commission).

3.3 Installation method and space

Impact & load

①The impact that the motor can stand should be less than 200m/s2（20G）. Don't apply excessive impact load to the motor during transporting, installing and disassembling. And do not hold encoder, cable and connector to transport the motor.

②The pull claw device must be used when removing the belt pulley and coupler from the motor

Combination with mechanical system

①The motor specification in the user manual has specified the permissible load to the motor shaft. Exceeding the permissible load will shorten the shaft life and cause damage to the shaft. Please use coupling which could fully absorb eccentric load.

②The stress on the encoder cable should be less than 6kgf during assembling.

③The bending radius of power cable and encoder cable should be R20mm and more.

Installation direction and clearance of drives

Leave sufficient space around the drive to ensure the heat dissipation and convection in the cabinet when installing the drive.

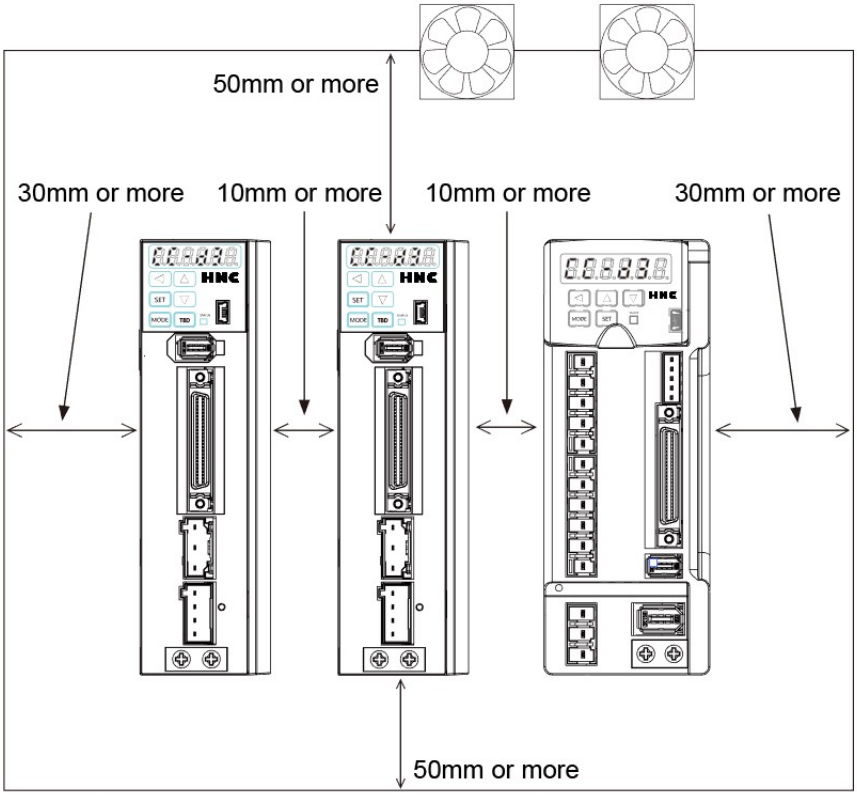
50mm or more
30mm or more
10mm or more
10mm or more
30mm or more
50mm or more

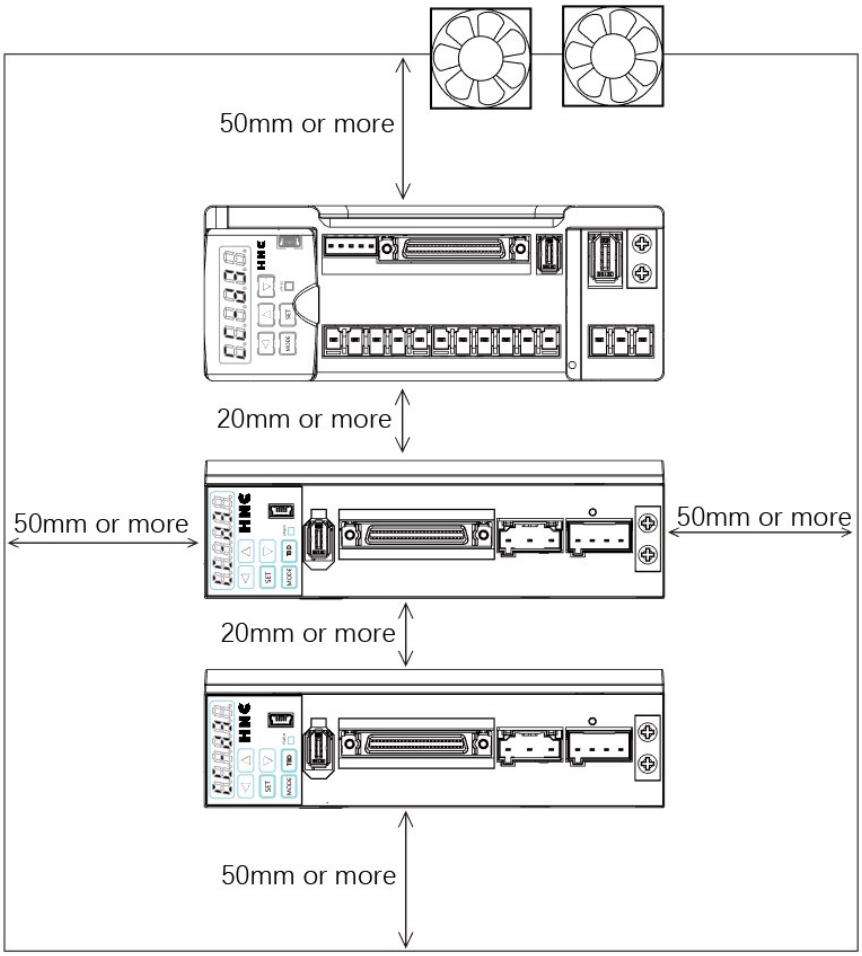
50mm or more
20mm or more
50mm or more
50mm or more
20mm or more
50mm or more

●Install the drives in the vertical direction. Please use two M5 screws to fix the drive, master drive and slave drive respectively which is less than 800W　Please use three M5 screws to fix the drive and master drive respectively which is more than 1kW.

●In order to ensure that surrounding temperature between internal boards is not more than 55℃, cooling fan or cooler need to be installed to reduce the temperature, when the drives are installed in the sealed cabinet.

●The temperature on the surface of cooling plate would be 30℃ higher than the surrounding temperature.

●Use heat-resistant material for the wiring and isolate wiring from the machine and other cables which are easily affected by the temperature.

●The service life of servo drive depends on the temperature around the electrolytic capacitor. When the electrolytic capacitor is close to the service life, the static capacity will decrease and internal resistance will increase. Consequently, it will lead to overvoltage alarm, malfunction caused by noise and components damage. The service life of electrolytic capacitor is approx. 5 to 6 years under the condition「average annual temperature 30℃, load rate 80% and operation of less than 20 hours a day on average」

Additional instructions

①The motor shaft is covered with anti-rust oil before leaving factory. Please have the antirust treatment again to the shaft to prevent it from rust when installing load.

②Never disassemble the encoder or motor.

③The GND of 24VDC input and the grounding cable of device can be connected to each other.

※Please use the same power supply for control voltage(24V and GND) and upper control device.

④Do not remove or maintain the encoder battery until the main power supply is switched OFF.

⑤After switching off the main power supply, please note that there is residual voltage of approx. 30 seconds on the power components.

⑥Do not replace the fuse.

⑦The servo drives of more than 750W are installed with a cooling fan on the right side. Do not touch or block the ventilation ports of servo drive

3.4 Dimensions of servo motor

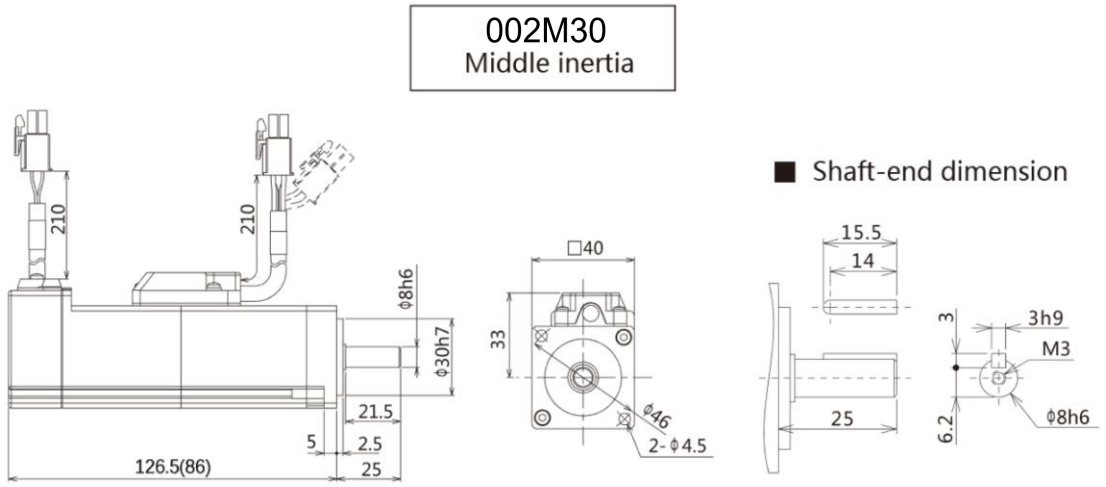

※ Dimension with parentheses () show dimensions with no brake

006L30
Low inertia

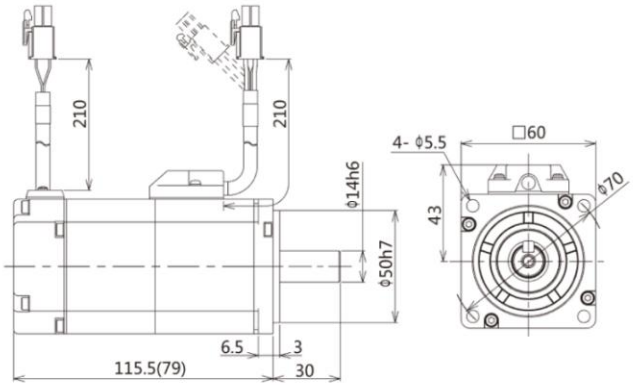

006H30
High inertia

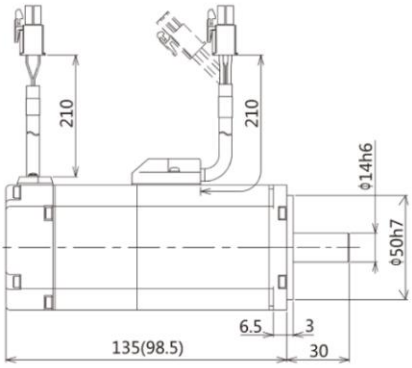

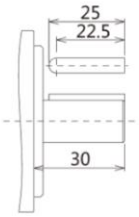

■ Shaft-end dimension

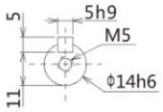

※ Dimension with parentheses () show dimensions with no brake

013L30
Low inertia

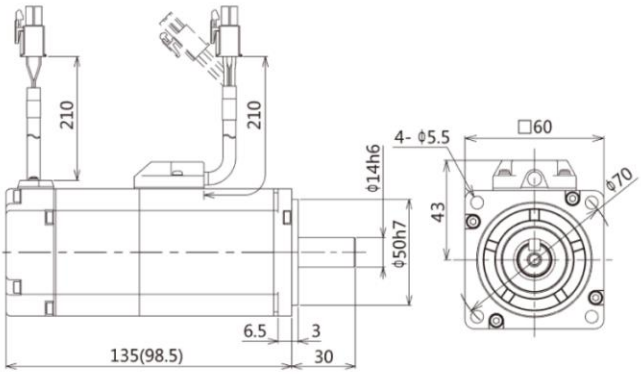

013H30
High inertia

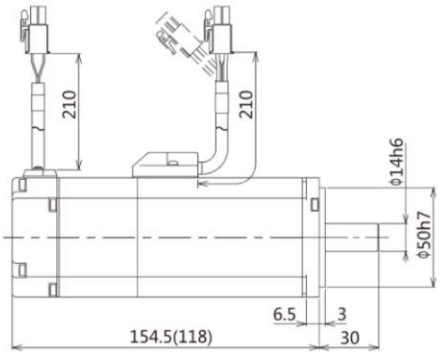

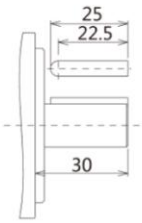

■ Shaft-end dimension

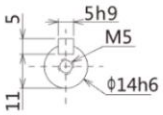

※ Dimension with parentheses () show dimensions with no brake

024L30
Low inertia

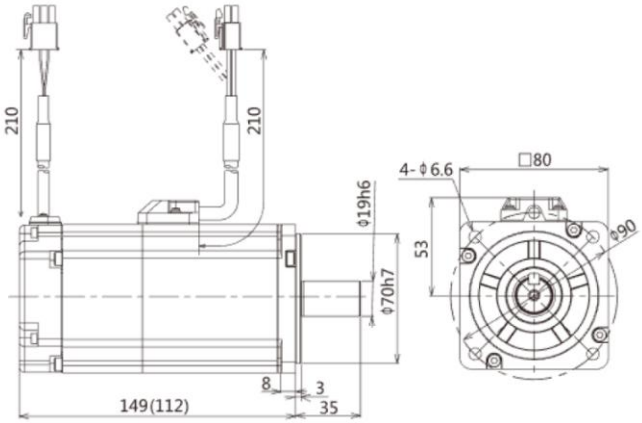

024H30
High inertia

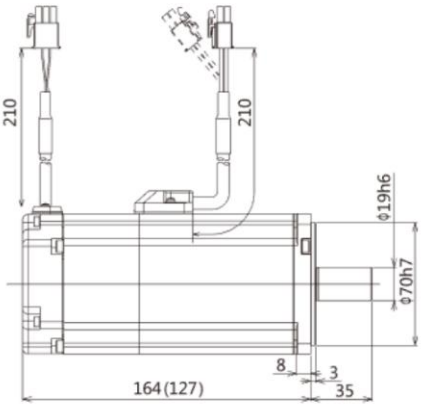

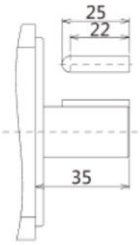

■ Shaft-end dimension

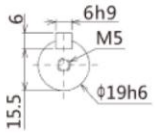

※ Dimension with parentheses ( ) show dimensions with no brake.

048M20
Middle inertia

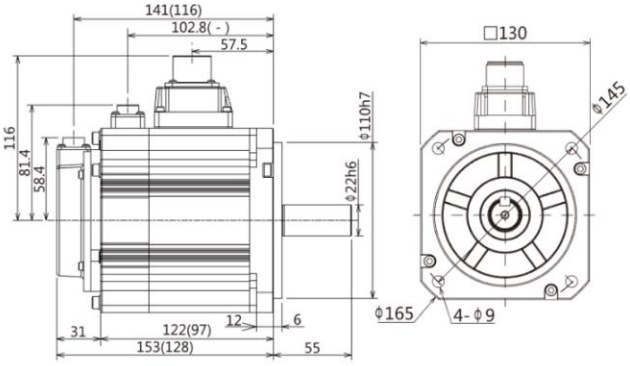

048H20
High inertia

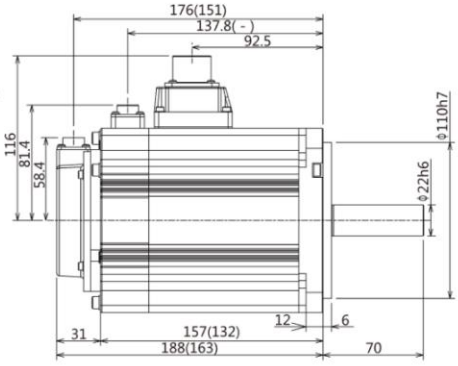

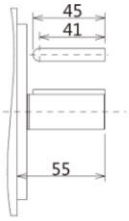

■ Shaft-end dimension

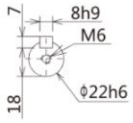

※ Dimension with parentheses ( ) show dimensions with no brake.

072M20
Middle inertia

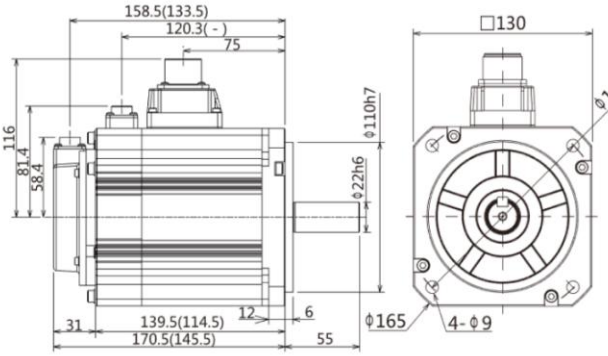

072H20
High inertia

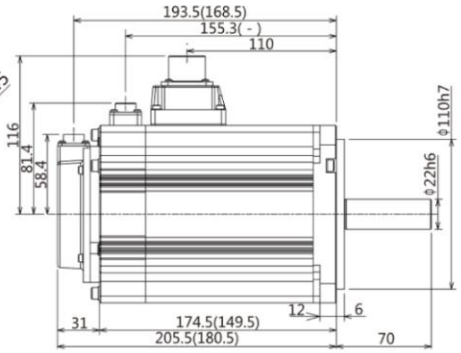

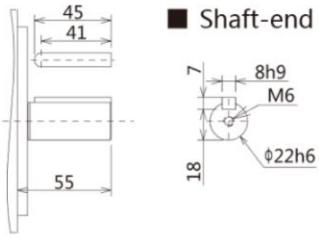

■ Shaft-end dimension

※ Dimension with parentheses ( ) show dimensions with no brake.

095M20
Middle inertia

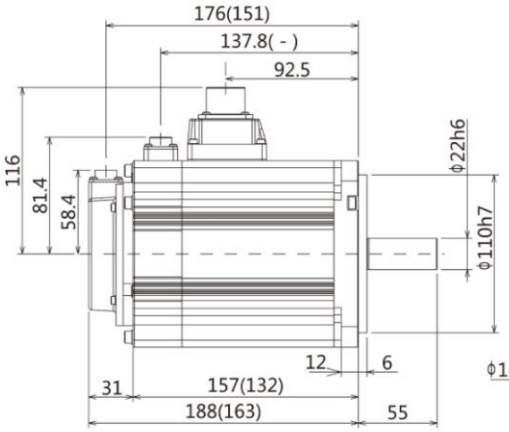

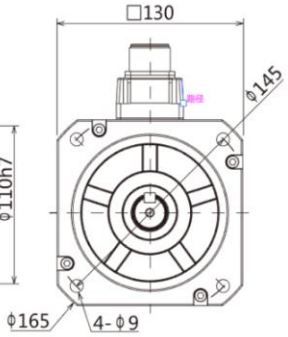

■ Shaft-end dimension

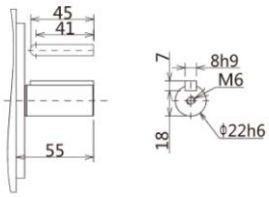

※ Dimension with parentheses ( ) show dimensions with no brake.

3.5 Dimensions of servo drive (Same dimensions for SV-E3)

Drive 200W or less

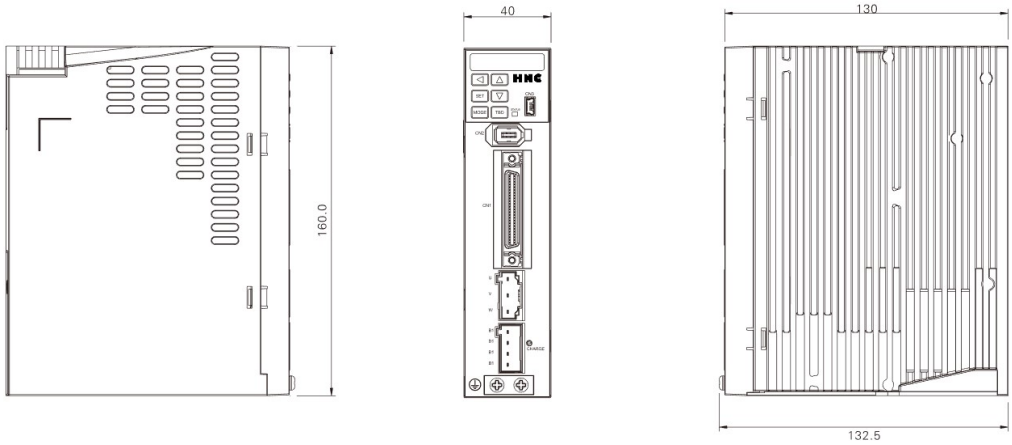

Drive 400W / 750W

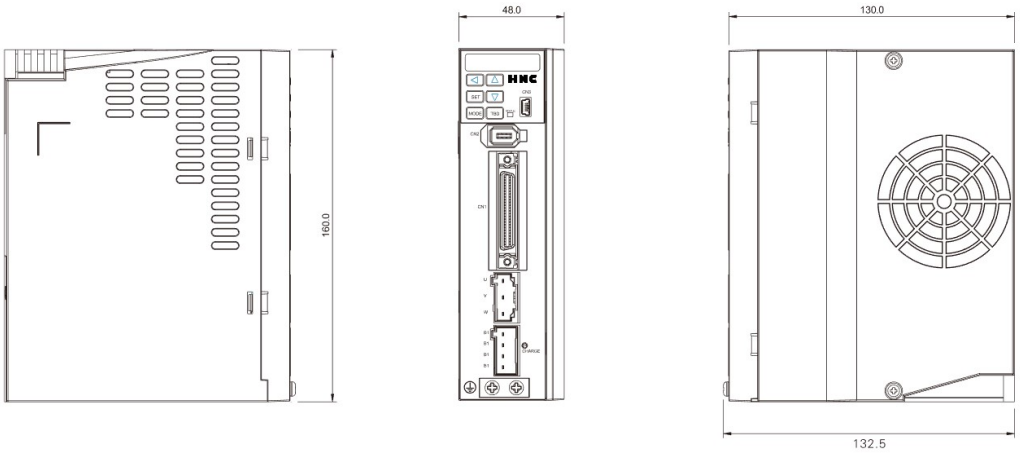

Drive 1000W or more

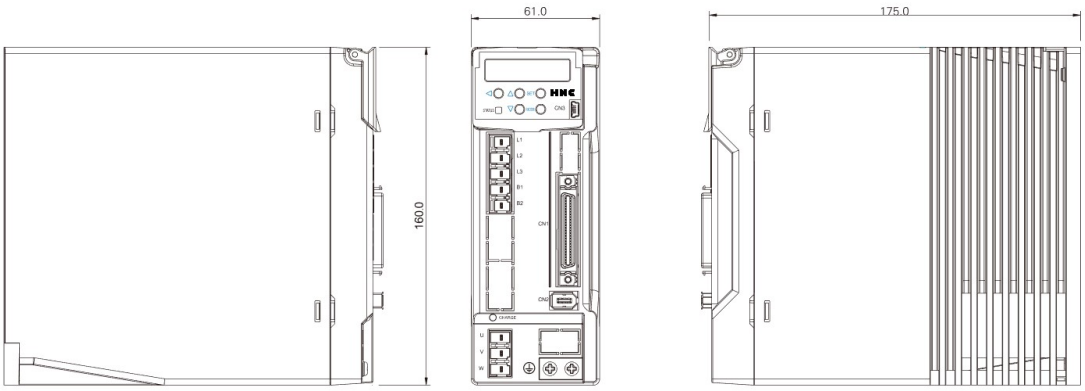

4. Wiring explanation for servo motor and drive

4.1 Wiring diagram

4.1.1 Wiring diagram

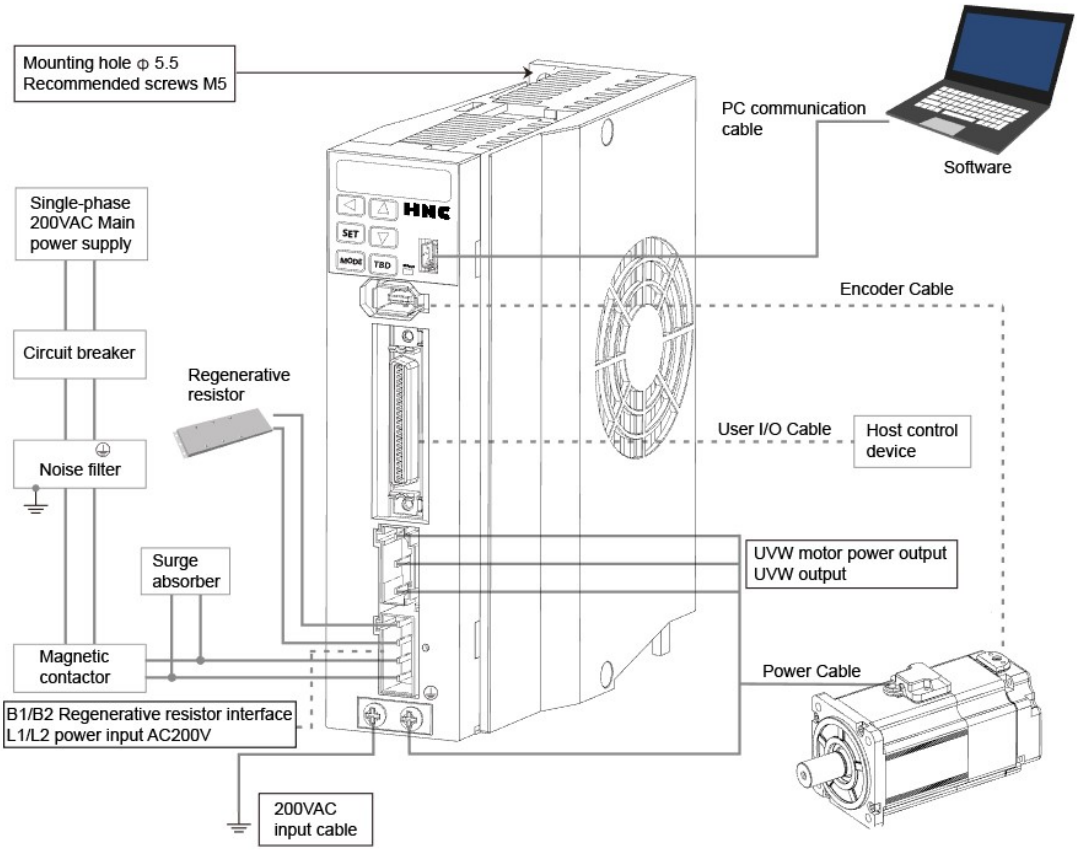

[Points for correct wiring]

※ 24VDC and 200VAC input (main circuit) power supply should be wired from the same 200VAC main power supply.

※ Do not access switch between 24VDC power supply and drive. If you need switch, put it on the 200VAC cable of 24VDC input power supply.

※ A twisted-pair shielded cable should be used when I/O cable length is over 50cm.

※ The encoder cable should be less than 20m.

Caution

① Please note that there is high voltage in the solid line of wiring diagram when wiring and using.

② The broken lines in the wiring diagram indicates the non-dangerous voltage circuit.

4.1.2 Connection of servo drive and motor

Items	Description
Peripheral device	Conform to European EC Directive. Select the device which meets corresponding standards and install them in accordance with User's Manual.
Installation environment	Install the servo drive to the environment which conform to Pollution degree 2 or 1 of IEC60664-1.
Power supply 1: 200～230VAC (main circuit)	This product can be used under the conditions that conform to IEC60664-1 and overvoltage category Ⅱ.
Power supply 2: 24VDC ♦control power supply of drive ♦I/O power supply ♦Power supply for brake release	The specification of 24VDC external power supply should satisfy the following conditions. Using SELV power supply(※) and power less than 150W. This is the CE corresponding conditions. ※SELV: safety extra low voltage (Reinforced insulation is needed for safety extra low voltage, non-dangerous voltage and dangerous voltage.)
Wiring	Please use withstand voltage cables which are equivalent to AWG18/600V or AWG14/600V for motor power cable, encoder cable, AC220 input cable, FG cable and main circuit power distribution cable under multi-axis drive structure respectively when drives are less than 750W or more than 1kW .
Breaker	Switch off the power supply to protect power cord when overcurrent occurs. Make sure to use the breaker between power supply and interference filter that conforms to IEC specification and UL recognition in accordance with the User manual. Please use the breaker with leakage function recommended by HCFA in order to meet EMC standards.
Noise filter	To prevent the outside interference from power cables. Please use the interference filter recommended by HCFA in order to meet EMC standards.
Magnetic contactor	Switch main power supply (ON/OFF). And use it after installing a surge absorber.
Surge absorber	Please use the surge absorber recommended by HCFA in order to meet EMC standards.
Interference filter for signal cable / ferrite filter	Please use the interference filter recommended by HCFA in order to meet EMC standards.
Regenerative resistor	This product is not equipped with regenerative resistor. The external regenerative resistor is necessary when the internal capacitor cannot absorb more regenerative power. Confirm the regenerative status on the panel. When the regenerative voltage alarm is ON, a regenerative resistor is needed. For the reference specification of regenerative resistor, please refer to user manual. Use a built-in thermostat and set overheat protect circuit.
Grounding	This product belongs to Class 1 and need grounding protection. Using protection grounding terminal. Grounding should be executed by the case and cabinet that conforms to EMC. The following symbol indicates the protection grounding terminal. ⏚

4.2 Drive connector and pins arrangement

4.2.1 Drive connector terminal

Figure 4.2.1 750W or less Drive connector terminal

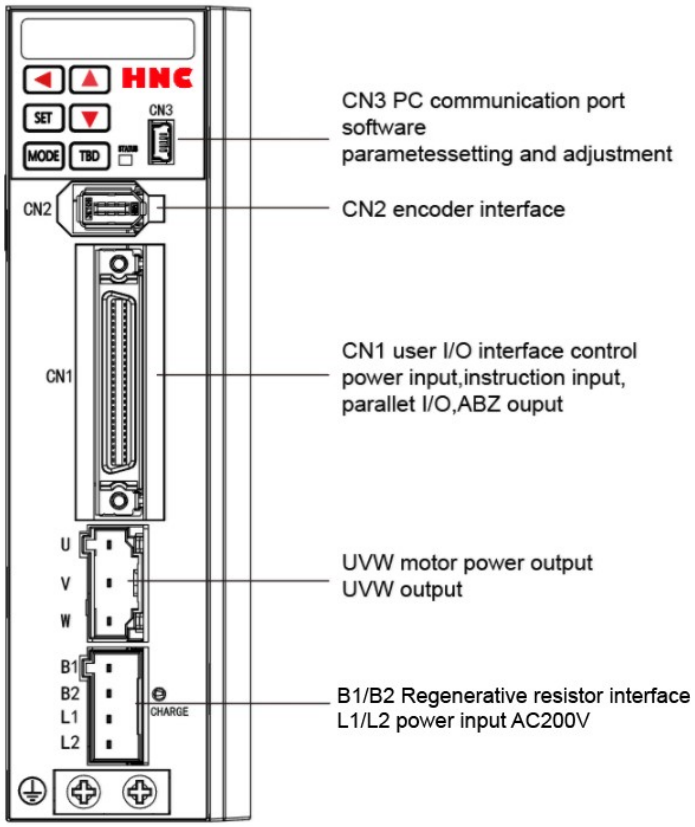

Table 4.2.1 Terminal arrangement of drive connector/ SV-E3P 750W or less

Name	Symbol	Pin No.	Signal name	Contents
Regenerative resistance connection	B1/B2/L1 /L2	1	B1	P interface of regenerative resistor
		2	B2	N interface of regenerative resistor
Single-phase 200VAC input		3	L	Primary Power 1
		4	N	Primary Power 2
Motor power output	U/V/W	1	U	Motor power U phase output
		2	V	Motor power V phase output
		3	W	Motor power W phase output
Encoder	CN2	1	VCC	Encoder power supply 5V output
		2	GND	Signal grounding
		3	NC	-
		4	NC	-
		5	+D	Encoder signal: data input/output
		6	-D	Encoder signal: data input/output
		-	FG	Connect SHIELD to the connector housing
PC communication	CN3	1	VBUS	USB power supply
		2	D-	USB data-

		3	D+	USB data+
		4	NC	-
		5	GND	USB signal grounding
External fan	CN14	1	24V	24V for external fan
		2	G24	GND for external fan
		3	NC	-
User I/O	CN1	Refer to “Chapter 8 Operation”		

Figure 4.2.2 1KW or more Drive connector terminal

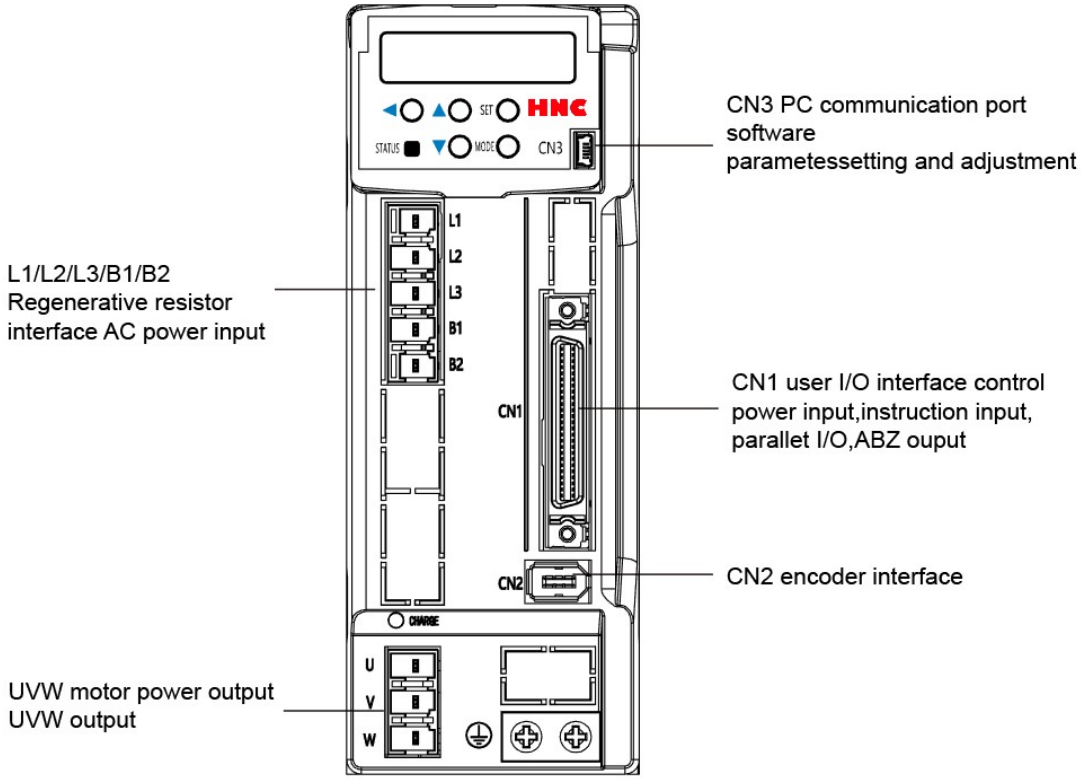

Table 4.2.2 Terminal arrangement of drive connector/ SV-E3P1KW or more

Name	Symbol	Pin No.	Signal name	Contents
Regenerative resistance connection	B1/B2	1	B1	P interface of regenerative resistor
		2	B2	N interface of regenerative resistor
Three-phase 200VAC input	L1/L2/L3	1	L1	Primary power 1
		2	L2	Primary power 2
		3	L3	Primary power 3
Motor power output	U/V/W	1	U	Motor power U phase output
		2	V	Motor power V phase output
		3	W	Motor power W phase output
Encoder	CN2	1	VCC	Encoder power supply 5V output
		2	GND	Signal grounding
		3	NC	-
		4	NC	-

		5	+D	Encoder signal: data input/output
		6	-D	Encoder signal: data input/output
		-	FG	Connect SHIELD to the connector housing
PC communication	CN3	1	VBUS	USB power supply
		2	D-	USB data-
		3	D+	USB data+
		4	NC	-
		5	GND	USB signal grounding
User I/O	CN1	Refer to “Chapter 8 Operation”		

4.3 Terminal arrangement and wiring color of motor connector

4.3.1 Motor connector and pins arrangement (750W or less)

Figure: 4.3.1 Motor connector and pins arrangement

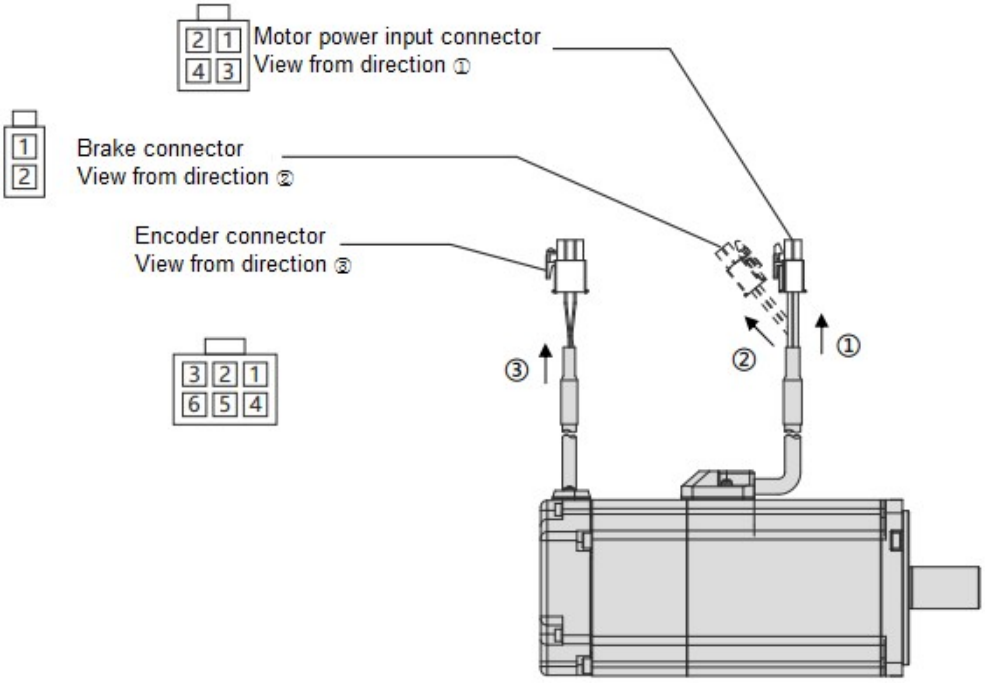

Table 4.3.1 Cable list (For motor of 750W or less)

Name	Cable
Motor power input	AWG18
Brake note 1	AWG22
Encoder (Incremental)	Power supply：AWG22 Signal：AWG24
Encoder (Absolute)	Power supply：AWG22 Signal：AWG24

Note 1 For the motor with brake

Table 4.3.2 For the motor of 750W or less

Name	Pin No.	Signal name	Contents	Wiring color
Motor power	1	U	Motor power U phase	Red

input	2	V	Motor power V phase	White
	3	W	Motor power W phase	Black
	4	FG	Motor housing grounding	Green
Brake (※ 1)	1	BRK+	Brake power supply 24VDC	Yellow
	2	BRK-	Brake power supply GND	Blue
Encoder(incremental)	1	-	NC	-
	2	+D	Serial communication data + data	White (red point)
	3	-D	Serial communication data - data	White (black point)
	4	VCC	Encoder power supply 5V	Orange (red point)
	5	GND	Signal ground	Orange (black point)
	6	SHIELD	Shielded wires	Black
Encoder(Absolute)	1	BAT	External battery (※ 2)	Yellow (black point)
	2	+D	Serial communication data + data	White (red point)
	3	-D	Serial communication data - data	White (black point)
	4	VCC	Encoder power supply 5V	Orange (red point)
	5	GND	Signal ground	Orange (black point)
	6	SHIELD	Shielded wires	Black

※1 For motor with brake.

※2 External capacitor and battery are taking GND as the reference potential.

4.3.2 Motor connector and pins arrangement (1kW or more)

Figure 4.3.2 Motor connector and pins arrangement (1kW or more)

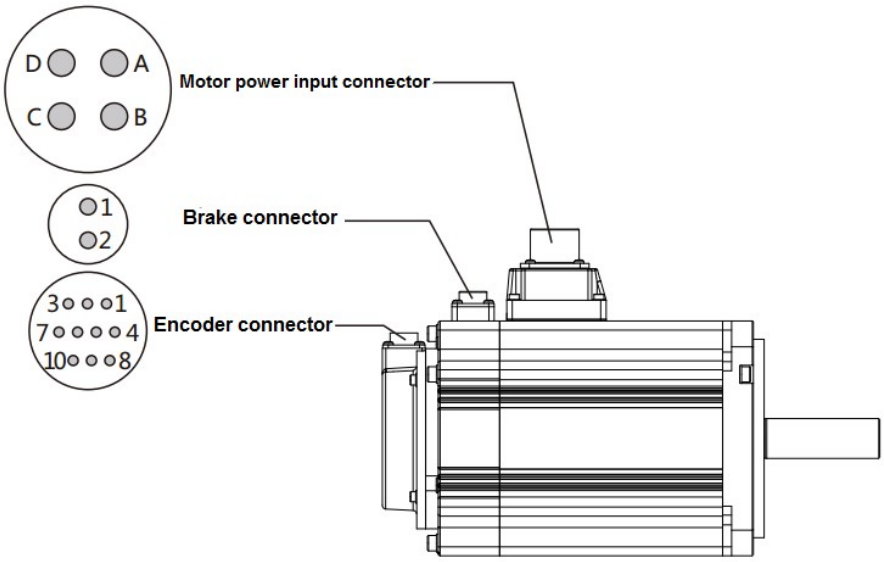

Table 4.3.3 Cable list (for motor of 1kW or more)

Name	Cable
Motor power input	AWG14
Brake note 1	AWG18
Encoder (Incremental)	Power supply：AWG22 Signal：AWG24

Note 1 For the motor with brake

Table 4.3.4 For the motor of 1kW or more

Name	Pin No.	Signal name	Contents	Remark
Motor power input	A	U	Motor power U phase	
	B	V	Motor power V phase	
	C	W	Motor power W phase	
	D	FG	Motor housing grounding	
Brake (※ 1)	1	BRK1	Brake power supply 24VDC	
	2	BRK2	Brake power supply GND	
Encoder(incremental)	1	VCC	Encoder power supply 5V output	
	2	GND	Signal ground	
	3	-	NC	
	4	-	NC	
	5	+D	Serial communication data + data	
	6	-D	Serial communication data - data	
	7	-	NC	
	8	-	NC	
	9	-	NC	
	10	SHIELD	Shielded wires	
Encoder(Absolute)	1	VCC	Encoder power supply 5V output	
	2	GND	Signal ground	
	3	CAP	External capacitor (※2)	
	4	BAT	External battery (※2)	
	5	+D	Serial communication data + data	
	6	-D	Serial communication data - data	
	7	IC	Internal connection (※ 3)	
	8	IC	Internal connection (※ 3)	
	9	GND	Signal ground	
	10	-	NC	

※1 For motor with brake.

※2 External capacitor and battery are taking GND as the reference potential.

※3 Internal connection (IC) has been connected internally. Do not connect it with any other wires.

4.4 RS-485 communication wiring description

The wiring between the drives and setting method of communication address are shown below. When using multi-station communication(the upper controller is wired with one servo drive), the parameters of multiple servo drives can be changed and the waveform of position deviation and rotation speed can be monitored by the upper controller.

The communication condition shown below.

Table 4.4.1

Communication	
Electrical specifications	EIA485
Communication method	Asynchronous serial communication(half-duplex)

Communication speed	57.6 kbps
Data bit	8 bit
Peer bit	None
Stop bit	1 bit
Alarm detection	CRC16-CCITT
Transmission data	8 bit binary
Data length	35 bytes or less

L1= 5m(max)

The wiring length between the upper controller and drive CN1 should be 5m or less.

L2=250mm(max)

The wiring length between each drives CN1 should be 250mm or less.

Terminal resistance

Connect the terminal resistor between 43pin and 44pin of CN1 to the last drive and to the upper controller.

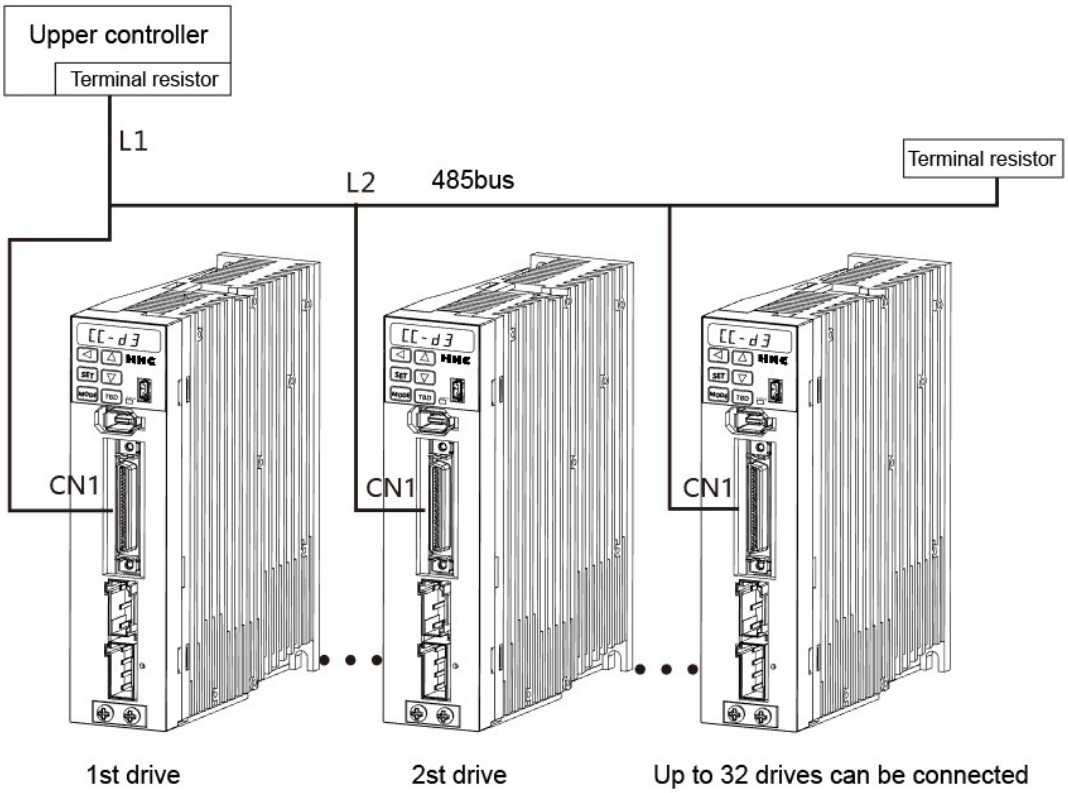

Figure 4.4.1 Multi-station connection example

The wiring between the drives are shown as above. And daisy-chained connection should be performed between the drive connector CN1 and the upper controller.

[Communication address setting]

When using multi-station communication, set the different communication address for each drive according to the following steps. There are two setting methods: by set panel and dedicated software.

Input 24V control power supply after wiring, then operate as the following steps For wiring, refer to section 4.1[Wiring diagram].

[Setting method by set panel]

①Press the MODE button three times from the initial display status. The leftmost display on the LCD (6 digits) is [P] to come to the parameter setting mode. There is 3 digits, the point(.) and 1 digit on the right side of [P]. And the rightmost display is blank or [r]. The parameter number is represented by 3 digits, the point(.) and 1 digit.

②Press the UP/DOWN and SHIFT button, when [P004.0r] shows, press SET button to display the current setting value. The initial value is [1].

③Press the UP/DOWN and SHIFT button and input the expected communication address. Setting range is from 1 to 32.

④Press the SET button to RAM, the indicator changes from flicker to lit.

⑤Press the MODE button three times to display [SAVE_P].

⑥Press the SET button, the [P] in [SAVE_P] flicker. When the parameter is stored in the EEPROM normally, [nr_End] displays.

⑦Notes: Cut off the power supply to the servo drive(Note1). Before restart the power supply, the servo drive operates as the former communication address.

⑧Set the communication address to the other drive as the same way described from ① to ⑦. When the single-axis drive are used in parallel, please set the communication address by the set panel of the servo drive.

5. Panel display and operation

5.1 Overview

The functions of operation panel are as follows:

a) Status display (Status display mode)

b) Alarm display (Alarm display mode)

c) Parameter setting (Parameter setting mode)

d) Auto tuning (Auto tuning mode)

e) Parameter saving (parameter saving mode)

f) Auxiliary functions (JOG function mode, parameter clearing mode, encoder clearing mode)

5.2 Part names

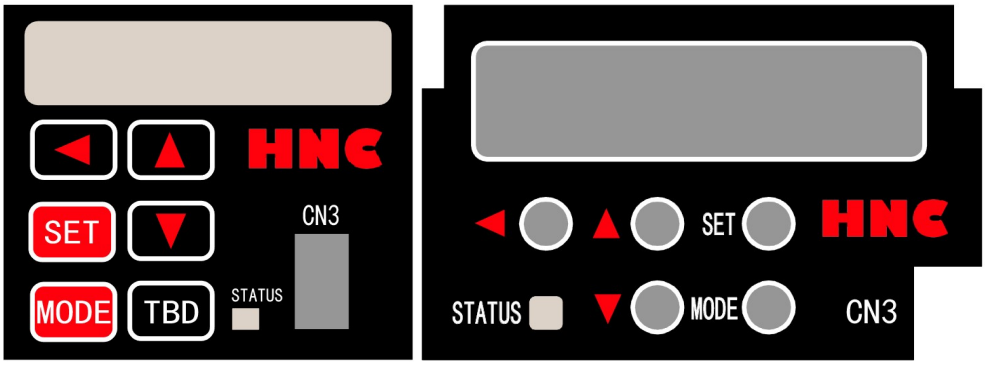

Table 5.2.1 Set panel for drive

Items	Description
MODE	Change operation mode and parameters.

SET	Item or value select/confirm
UP	Selected value (flicker) increase
UP (long-press)	Selected value (flicker) increase rapidly
DOWN	Selected value(flicker) decrease
DOWN(long-press)	Selected value(flicker) decrease rapidly
SHIFT	Selected cursor moves left.
SHIFT+DOWN	The screen lock/unlock
SHIFT+UP	Reset the servo drive
SHIFT+S, long press for 2s or more	The servo drive enabling ON/OFF

5.3 Operation mode change

The operation procedures of changing operation mode by set panel are shown below.

Turn on the control power to the drive, the set panel will show . Press the MODE button once, it will show Speed feedback(motor speed r/min). Press the MODE button once again, it comes to the Status display mode and shows 「dP_St」. When press the MODE button again, it will come to Alarm display mode, Parameter setting mode, Auto tuning mode, Parameter saving mode in turn. Press the MODE button again, it returns to the Status display mode. Press the SET button to come to the selection of operation mode.

Figure 5.3.1

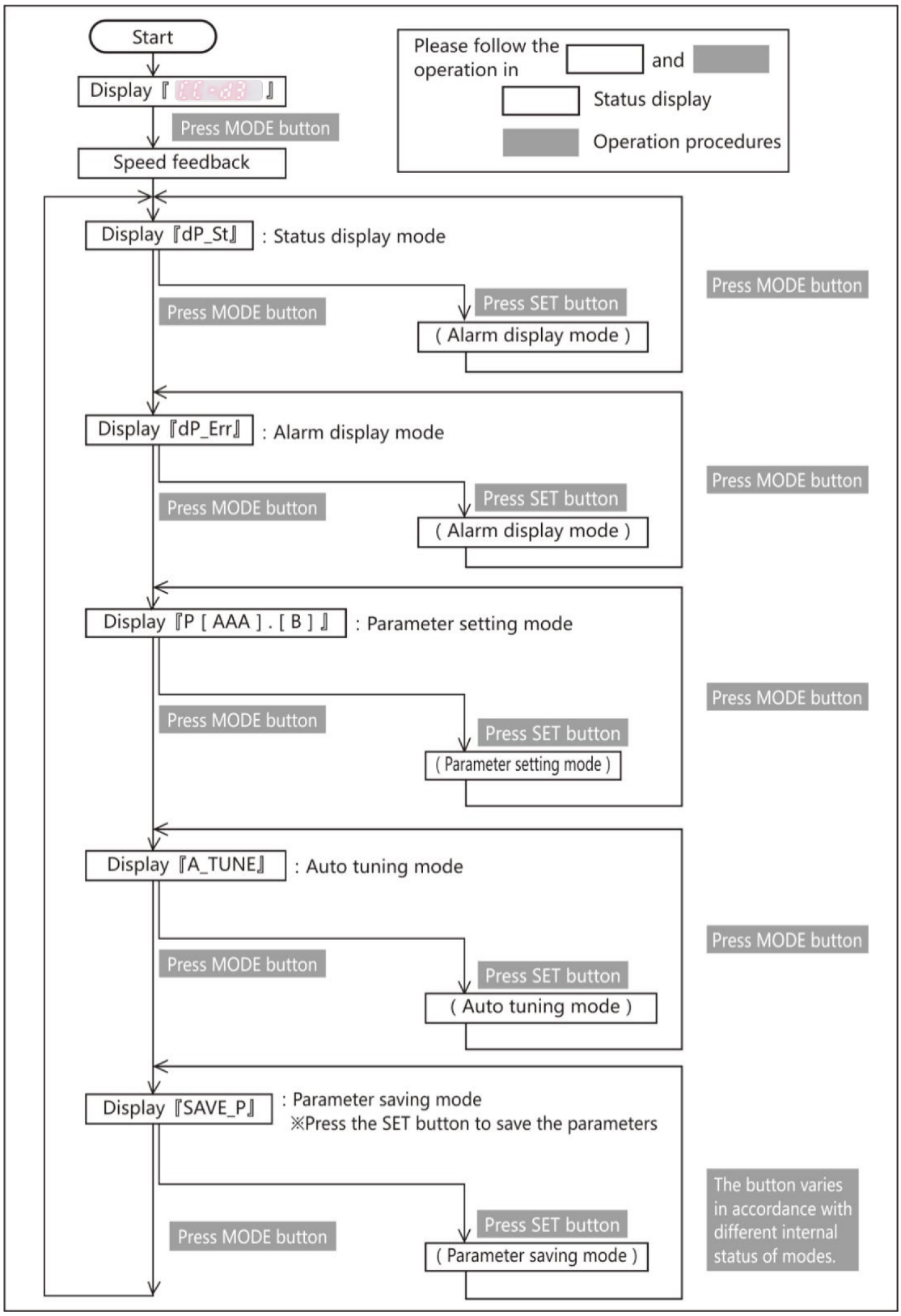
Start
Display 『 』
Press MODE button
Speed feedback
Please follow the operation in
and
Status display
Operation procedures
Display 『dP_St』
: Status display mode
Press MODE button
Press SET button
(Alarm display mode)
Press MODE button
Display 『dP_Err』
: Alarm display mode
Press MODE button
Press SET button
(Alarm display mode)
Press MODE button
Display 『P [AAA] . [B] 』
: Parameter setting mode
Press MODE button
Press SET button
(Parameter setting mode)
Press MODE button
Display 『A_TUNE』
: Auto tuning mode
Press MODE button
Press SET button
(Auto tuning mode)
Press MODE button
Display 『SAVE_P』
: Parameter saving mode
※Press the SET button to save the parameters
Press MODE button
Press SET button
(Parameter saving mode)
The button varies in accordance with different internal status of modes.

5.4 Status display mode

The operation procedures of Status display mode are shown below.

Press the “MODE” button twice from the beginning to get into status display mode and 「dP_St」 displays. Model code and serial number can be checked in this mode.

Status mark number will be displayed on the right side of「St_」 when press “SET” button. As for the meaning of status mark, refer to 「Status display list」 or 「Status description」. The status mark number will display alternatively when press “UP” or “DOWN” button. When status displays, press "SET" button to display its value.

Model code and serial number will be displayed after the status when press “UP” or “DOWN” button. The status mark number will display alternatively. Model code will be displayed in 「Pt_[AAA]」 and serial number displayed on 「Ps_[AAA]」. In the display _[AAA], 「Jot」indicates the motor, 「drv」indicates the drive and 「Enc」indicates the encoder.

Figure 5.4.1

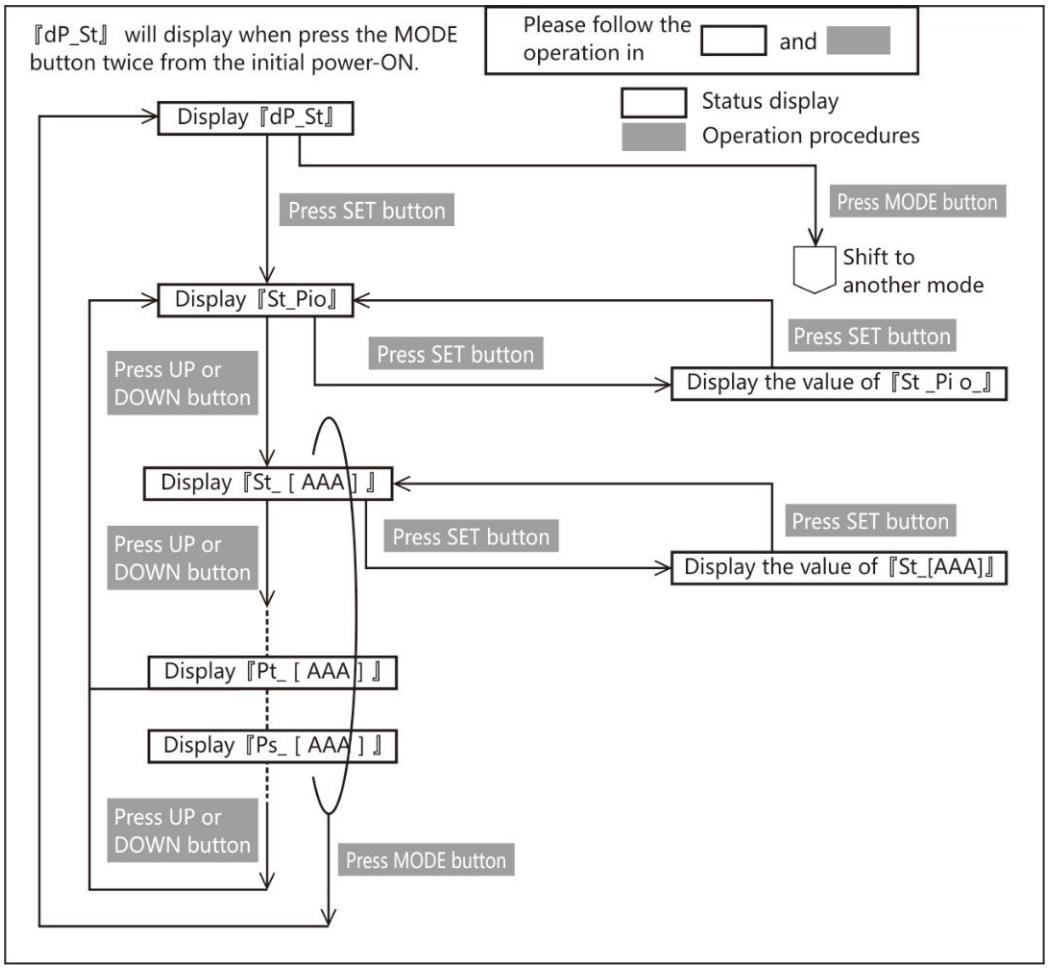

Table 5.4.1 Status display list

Mark number	Status
	Parallel I/O status Display the bit number of assigned parallel IO. For details, refer to [About parallel I/O status]
	Temperature at the control part[℃]. Temperature at the control part of servo drive.

	Command pulse input (position)[pulse] To confirm the number of pulse from upper controller.
	Command pulse input (speed) Differential of Command pulse input (position) Less than 750W: [pulse/160μs], more than 1kW: [pulse/200μs]
	Analog command input(command value)[r/min] By adding input filter and gain, the analog speed command from upper control device can be regarded as input value of speed command.
	Positioning completion 0: during positioning; 1: positioning completed.
	ABS position command [pulse] Display the position command value according to the command pulse
	ABS position feedback[pulse] Display the motor position feedback by encoder according to command pulse
	Command position deviation[pulse] Display the difference value between the position command and position feedback according to command pulse.
	Position command[pulse] Pulse command input(position). The command value input after division and multiplication smoothing in internal position command. Encoder pulse.
	Position feedback [pulse] The actual position values detected by encoder.
	Position differential [pulse] Display the differential between position command value and position feedback value.
	Speed command [r/min] The value input into the position and speed control of drives.
	Speed feedback [r/min] Motor speed detected by encoder.
	Speed deviation[r/min] Differential between speed command and speed feedback value.

	Torque command[0.1%] The corresponding rated torque of 1000 is 100%, and corresponding rated torque of 3000 is 300%.
	Load ratio[digit] Permissible value is about 1000(load ratio 100[%]), overload error occurs when the load continuously exceed 1440s.
	Encoder/Rotor mechanical angle (1 rotation) [pulse] 1 rotation absolute angle data of rotor output by the encoder
	Encoder/Rotor mechanical angle (integrate) [pulse] Multi-rotation integrate angle data of rotor output by the encoder when using absolute encoder.
	Regenerative status Display regeneration status. For details, refer to [4-4-4 Regenerative status].
	Main circuit voltage[0.1V] Display the main circuit voltage.(reference value) ※Display only in the model「DA2□□2*」
	Model code of servo drive. Display the model code of servo drive.
	Model code of servo motor. Display the model code of servo motor.
	Model code of encoder. Display the model code of encoder.
	Serial number of servo drive. Display the serial number of servo drive.
	Serial number of servo motor. Display the serial number of servo motor.
	Serial number of encoder. Display the serial number of encoder.

Table 5.4.2 Corresponding display for the letters

Letter	Status display	Letter	Status display	Letter	Status display	Letter	Status display
A		N		a		n	
B		O		b		o	
C		P		c		p	
D		Q		d		q	
E		R		e		r	
F		S		f		s	
G		T		g		t	
H		U		h		u	
I		V		i		v	
J		W		j		w	
K		X		k		x	
L		Y		l		y	
M		Z		m		z	

[About LCD display]

The LCD can display the parameter of more than 6 digits and shows the following screens. Take the positive value 「123456789」and negative value 「-123456789」as example..

1) Screen 1 Display lower 5 digits(lower)

Positive

Negative

2) Screen 2 Display upper 5 digits(middle)

Positive

Negative

3) Screen 3 Symbol display(upper)

Positive(Display「＋」)

Negative(Display「-」)

Starting from the right (lower bits) digit, the select cursor moves left when press “SHIFT” button. When the fifth digit flashes , press “SHIFT” button and it comes to the next screen. Press “SHIFT” button in Screen 3(Symbol display) and it comes back to Screen 1(Display for lower 5 digits). That is to say, the screen changes the order of Screen 1(Display for lower 5 digits)→Screen 2(Display for upper 5 digits) →Screen 3(Symbol display) →Screen 1 (Display for lower 5 digits). 「-」on the left indicates digit position. 「_」indicates the lower digits;「－」middle digits; 「‾」upper digits. When display negative values, the left point at the button will always light from lower digit to upper digit. However this left point won’t light When the displayed

digital number is less than 6 even if it's negative.,

[Parallel IO status]

Display the control signal input (8 points) and output (8 points) status of I/O connector (CN1).

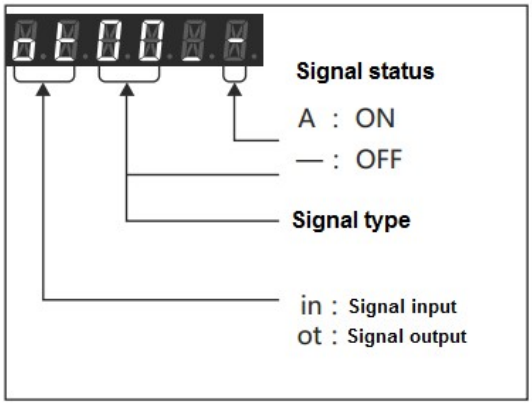

The following table lists the signal name of I/O connector (CN1) and parallel IO status display. For the details of user I/O connector(CN1), refer to 「8.7.1 Signal description」

Table 5.4.3

Display	Signal name	Contents
ot00	O1 (MBRK)	O1 (Brake release output) Output status
ot01	O2 (SERVO)	O2（Servo output）Output status
ot02	O3 (POSIN/-)	O3（Positioning completed /reserved）Output status
ot03	O4 (-)	O4（Reserved）Output status
ot04	O5 (-)	O5（Reserved）Output status
ot05	O6 (OCZ)	O6（Encoder Z phase Open collector output）Output status
ot06	O7 (SRDY)	O7（Servo ready）Output status
ot07	O8 (ALM)	O8（Alarm output） Output status
in00	I1 （SVON）	I1（Servo ON Input） Input status
in01	I2 （RESET）	I2（Alarm reset input） Input status
in02	I3 (HOLD/VCRUN1)	I3（Command input inhibit/Internal speed command-Start 1）Input status
in03	I4 (PCLR/VCRUN2)	I4（Deviation counter clearing input /Internal speed command-Start 2）Input status
in04	I5 (-/VCSEL1)	I5（Reserved/ Internal speed command—Speed command selection 1）Input status
in05	I6 (CCWL/VCSEL2)	I6（CCW drive restriction /Speed command selection 2 Input） Input status
in06	I7 (CWL/VCSEL3)	I7（CW drive restriction / Speed command selection 3 Input） Input status
in07	I8 (TLSEL1)	I8（Torque limit input）Input status

The operation procedures of parallel IO status are shown below.

Press the "UP" or "DOWN" button, the number will be displayed alternatively. When input signal displays, press "SHIFT" button and it will shift to output signal 「ot00」. When output signal displays, press "SHIFT" button and it will shift to input signal 「in00」.

Figure 5.4.3

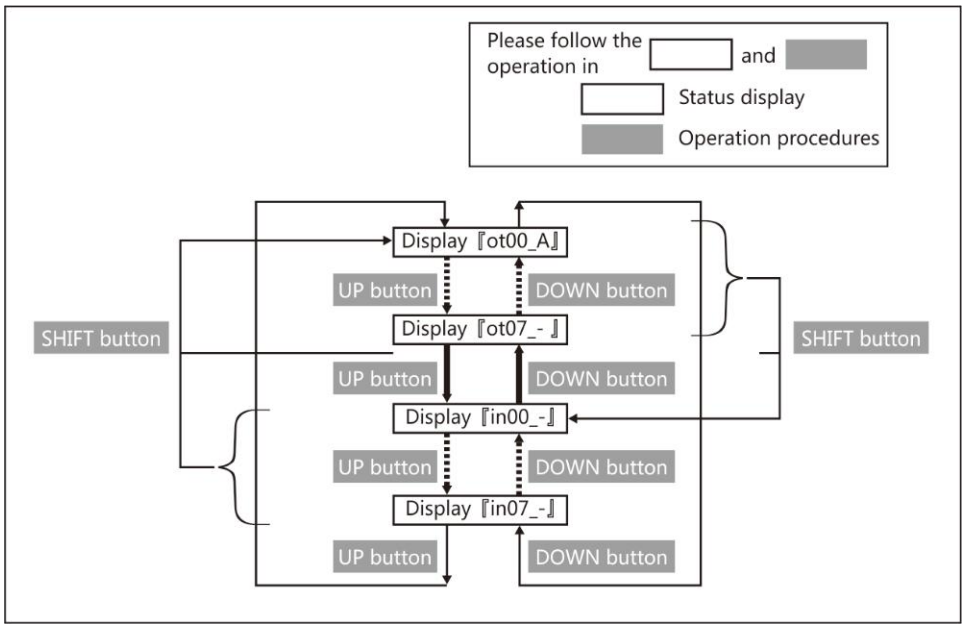

[Regenerative status]

Display main circuit DC power supply of drive and the working status of regenerative power circuit.

When 『 SE_REG 』 displays in the set panel, press SET button to show the following

Figure 5.4.4

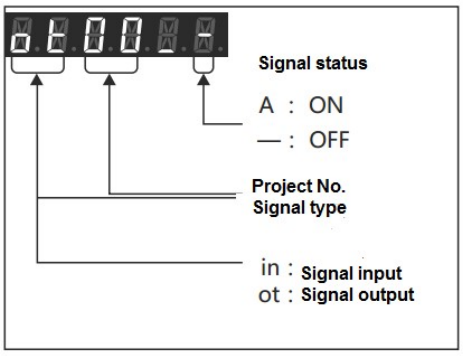

Table 5.4.4 Display list of regenerative status

Display	Name	Description
ot00	Regenerative control output	Indicates the drive working status of regenerative power circuit. When the signal is ON, regenerative power is under the operation by regenerative resistor.
ot01	Reserved	『-』fixed
:	:	:
ot07	Reserved	『-』fixed
in00	Regenerative voltage alarm	When the DC voltage of main circuit reaches the regenerative voltage alarm, the signal is ON, which indicates the drive regeneration circuit may be on working state. A regenerative resistor is recommended to be connected. When voltage is less than regenerative threshold voltage, the signal is ON.
in01	Regenerative threshold voltage	When the DC voltage of main circuit reaches regenerative threshold voltage, the signal is ON, which indicates the drive regeneration circuit is on working state. A regenerative resistor must be connected. If not, the power failure may occur.
in02	Reserved	『-』fixed
:	:	:

in07	Reserved	『-』fixed

Operating procedures of regenerative status are as follows.

Press the “UP” or “DOWN” button, the number will be displayed alternatively. When input signal displays, press “SHIFT” button and it will shift to output signal 「ot00」. When output signal displays, press “SHIFT” button and it will shift to input signal 「in00」

Figure 5.4.5

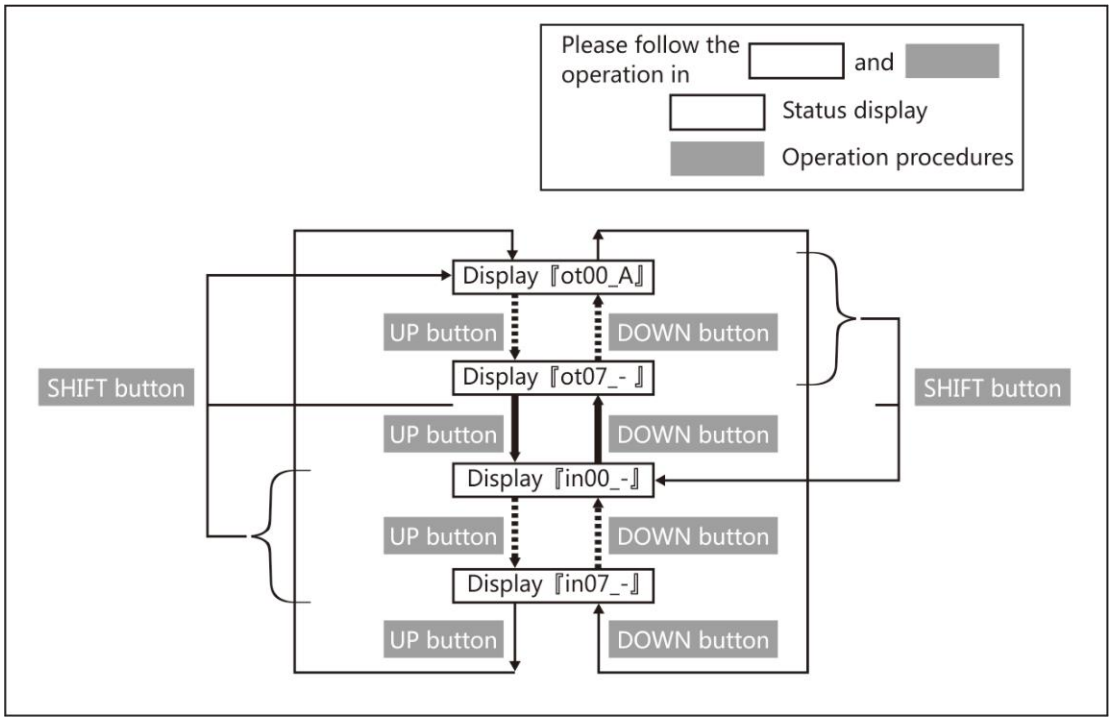

Follow above operating procedures to confirm whether a regenerative resistor is needed or not. When the display changes from 「in00_-」 to 「in00_A」, the regenerative discharge is opened and the regenerative resistor is needed. For details, refer to [Regenerative resistor]. Starting from low speed (20% of the highest speed), operating the motor to the expected movement slowly and observing if the display value changes from「in00_-」to「in00_A」 If「in00_A」displays, a regenerative resistor is needed. Operation panel displays as follow:

Need a regenerative resistor

Do not need any regenerative resistor

5.5 Alarm display mode

The following shows the operating procedures of alarm display.

Press the “MODE” button three times from the beginning,「dP_Err」indicates the alarm display mode. Press the “SET” button to display the drive alarm status and 「Err.--」indicates no alarm. If an alarm has occurred, the corresponding alarm number is output on the right side of 「Err.」. For the details of alarm number, refer to the following [Alarm items]. If several alarms have occurred, press “UP” or “DOWN” button to display the alarm number.

When an alarm has occurs, 「Err.**」will be displayed on the operation panel except these four modes. (** indicates the alarm number) ①Parameter setting mode, ②Auto tuning mode , ③In Parameter saving mode, ④Auxiliary functions, when press

"MODE" button and the display can change from this mode to another, 「Err.**」 will display.

For the remedies and reset method of alarm, refer to [9.2 Alarm disposal and reset].

Figure 5.5.1

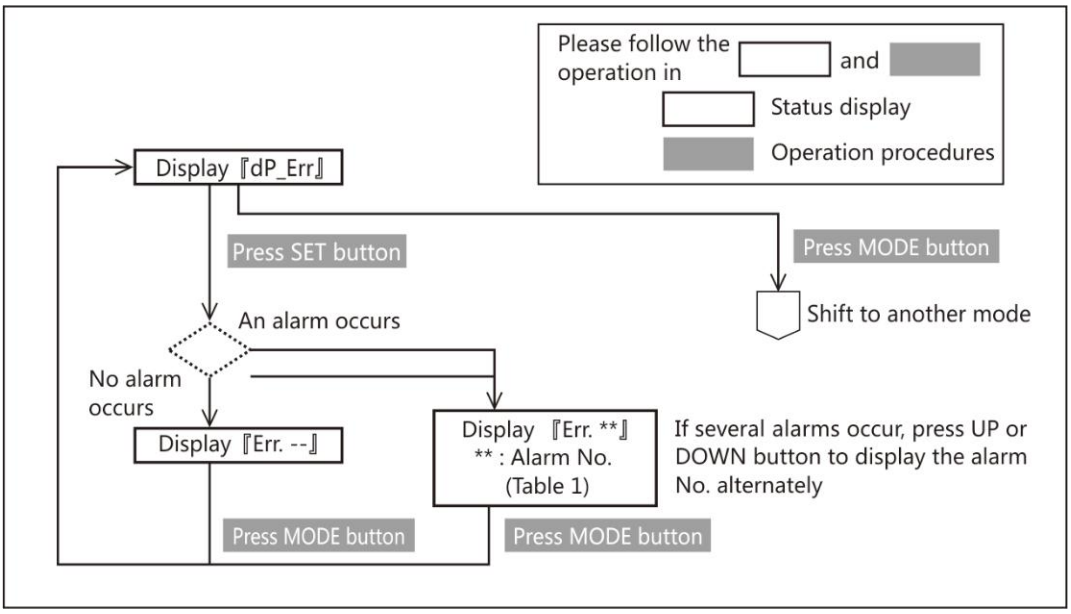

Table 5.5.1 Alarm No.

Alarm No.	Alarm description	Alarm No.	Alarm description
00	System error	16	Encoder error (receive data)
01	EEPROM data error	17	Encoder error(no response)
02	Model code error	18	Encoder error (circuit)
04	Overspeed	19	Encoder error (communication)
05	Speed deviation error	20	Encoder error(multi-rotation data)
06	Position deviation error	21	Encoder error(voltage drops)
07	Overload error	22	Power error (control power)
08	Command overspeed error	23	Switch circuit error
09	Encoder pulse output frequency error	24	Overcurrent error
10	Internal position command overflow error/ Home position return failure	25	Inverter error 1
11	Encoder error(multi-rotation counter overflow)	26	Inverter error 2
12	Overheat	27	Current sensor error
14	Overvoltage	29	Power error (drive internal)
15	Power supply error(main circuit)		

5.6 Parameter setting mode

The operating procedures of parameter setting are shown below.

When pressing “MODE” button three times from the initial display, 「P」will be displayed on the leftmost of LCD and it comes to parameter setting mode. 3 digits, a decimal point, 1 digit and a blank will be displayed in turn on the right side of 「P」. The combination of 3 digits, a decimal point and1 digit constitute the parameter No. Press UP or DOWN button to the parameter No. to be set and press SET button to display the parameter value on the servo drive.

For the details of parameter number, refer to [Section 6 Parameter Description]. When「r」is displayed on the rightmost side , it means the drive power supply must be restarted after saving the parameter. For the methods of parameter saving, refer to 「Section 5.8 Parameter saving mode」

Restart the power supply to the drive

No need to restart the power supply to the drive

The operating procedures of parameter change are shown below. If parameters displayed, the rightmost LCD will flash and it comes to the state that parameters can be input.

On the condition that parameter is beyond the range from -99999 to 99999(only for No.087.0 position deviation error detection value), as said in [Status display mode] and [Signed 6-digit or more parameter on LCD], 5 digits can be displayed every time. The flashing digit can be changed and press “SHIFT” to select the digit to be changed (flash). Parameter value can be changed by pressing “UP” or “DOWN” button. Press “SET” button to set the parameter on the drive and the digit will no longer flicker. If you do not want to change the parameter value and just confirm it, press “MODE” button to return. If the drive is powered off, the parameter value will return to the state before change.

In order to save the parameter after change in the EEPROM of drive, refer to [Section 5.8 Parameter saving mode] for details.

Figure 5.6.1

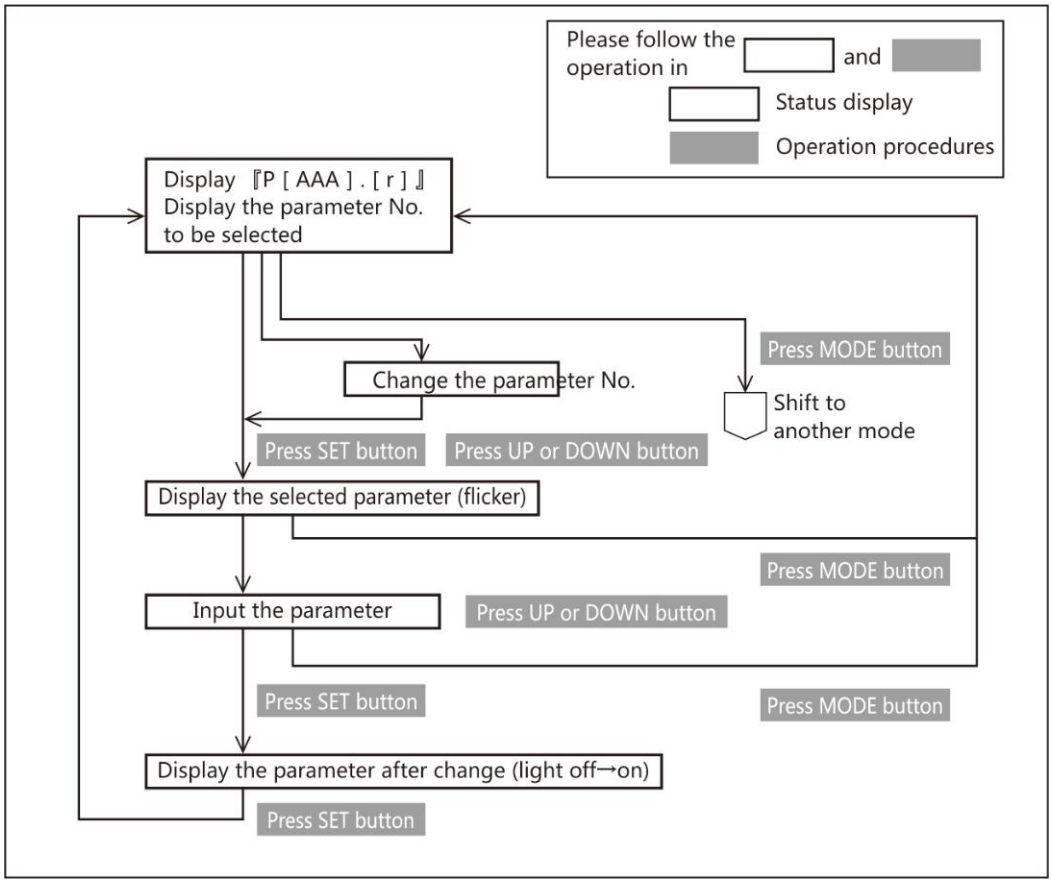

5.7 Auto tuning mode

Auto tuning mode includes 「Simple adjustment」 and 「Fine adjustment」.

「Simple adjustment」

Select gain level among 5, 10, 15, 20, 30 and then start auto tuning and setting automatically the expected inertia ratio to achieve the desired operation. Meanwhile, the inertia ratio can be set manually. The most suitable gain can be set corresponding to inertia ratio.

「Fine adjustment」

To achieve the optimum operation effect after Simple adjustment, some gain parameters need to be set. It's generally optimized in accordance with the order of gain level →Inertia ratio→FF1 gain. It can also be optimized more easily in accordance with the order of integral gain→FF2 gain→damping ratio.

「A_TunE」(Auto tuning mode) will be displayed after press "MODE" button five times from the initial display status.

In auto tuning mode, parameters which are set in Parameter setting mode can be displayed after the 「Simple adjustment」 and 「Fine adjustment」.Please follow the procedures below to operate. This mode will show under position control or speed control mode.

The parameter group that can be set in position control or speed control mode is as follows. If pressing "SHIFT" button in auto tuning mode, [Parameter name] on the operation panel will shift to [Parameter number]

Table 5.7.1

Position control		
Display order	Name	Parameter name/ number displayed on panel

1	Inertia condition	P_GGLP / 113.1
2	Control gain setting	P_GSET / 113.0
3	Inertia ratio	P_inEr /102.0
4	conversion ratio of Inertia ratio	P_inTr /104.0
5	Selection of real-time auto tuning	P_TUEn /110.1
6	Control level	P_CLEv /114.0
7	Integral gain	P_inTE /119.0
8	First gain FF compensation	P_GFF1/117.0
9	Second gain FF compensation	P_GFF2/118.0
10	Damping ratio	P_dAmP/103.0

Table 5.7.2

Speed control		
Display order	Name	Parameter name/ number displayed on operation panel
1	Control gain level	P_GSET /129.0
2	Inertia ratio	P_inEr /102.0
3	Setting of auto tuning	P_ES7d /110.0
4	Selection of real-time auto tuning	P_TUEn /110.1
5	Control level	P_CLEv /130.0
6	Integral gain	P_inTE /133.0
7	First gain FF compensation	P_GFFS /132.0
8	Damping ratio	P_dAmP/103.0

Figure 5.7.1

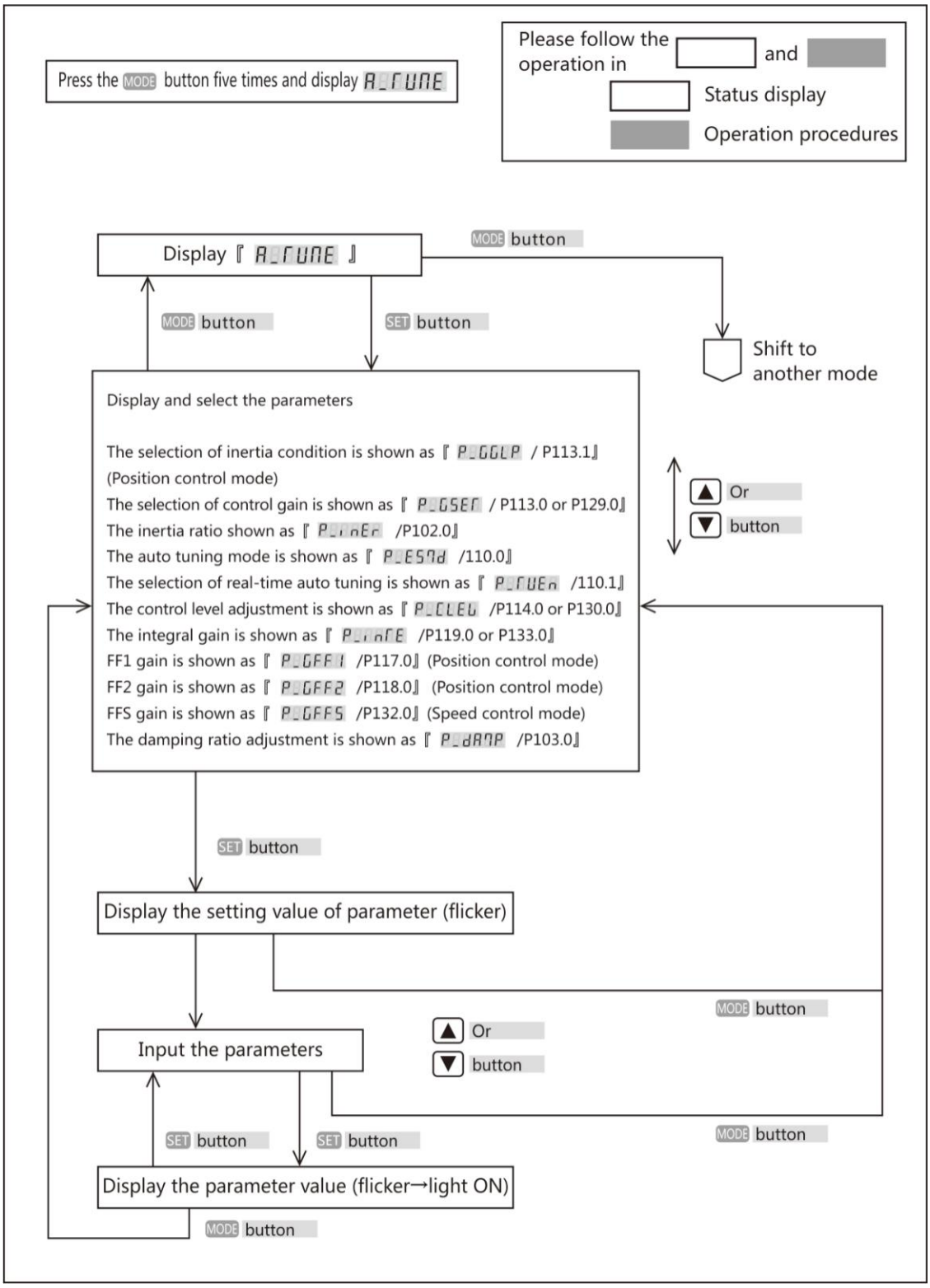

5.8 Parameter saving mode

「SAVE_P」(Parameter saving mode) will be displayed on the panel if pressing 'MODE" button six times from the beginning. The new parameters, set in Parameter setting and auto tuning mode, can be written to EEPROM in the parameter saving

mode. Please note that the newly-set parameters, which have been set in Parameter setting and auto tuning mode but not saved to EEPROM, will disappear and return to the value before after power-off.

The operating procedures of saving parameters are shown below.

Figure 5.8.1 Parameter saving mode

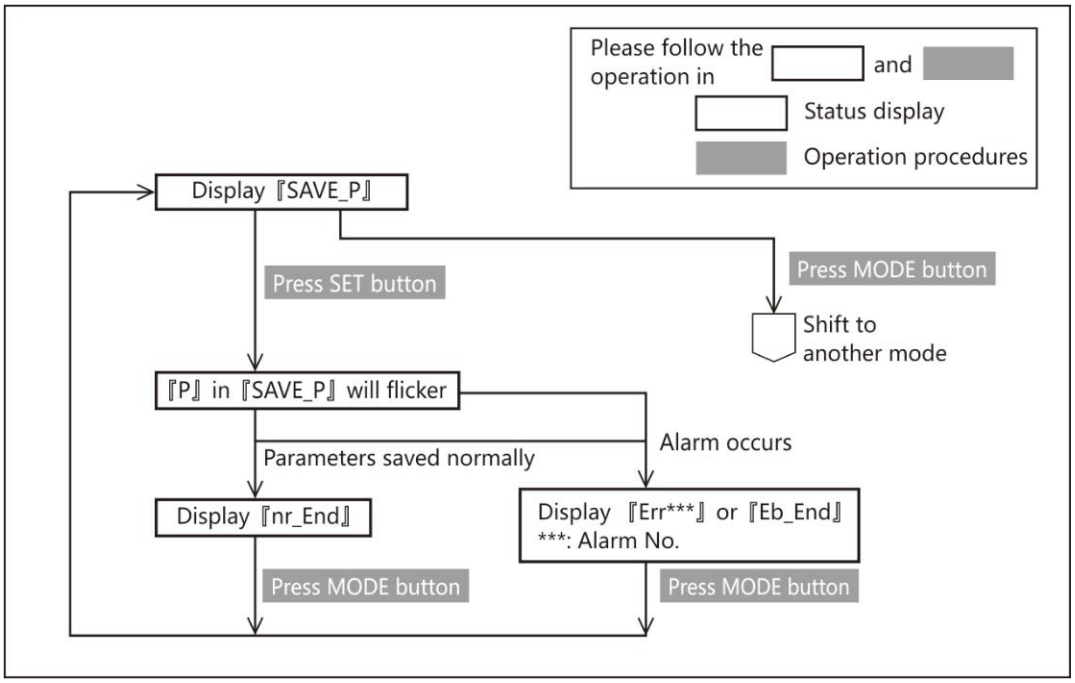

In parameter setting mode when change the parameters that need restarting 24VDC control power supply, please restart the control power supply after the above procedures done. The changed parameters become effective after restart control power supply.(For the models of 1kW or more, power off the main circuit power supply and restart it after the screen display is off)

5.9 Auxiliary function

『SubFnc』will display after press the MODE button seven times from the initial status .

Please operate as the procedures shown in Figure 5.9.1.

Figure 5.9.1 Auxiliary function

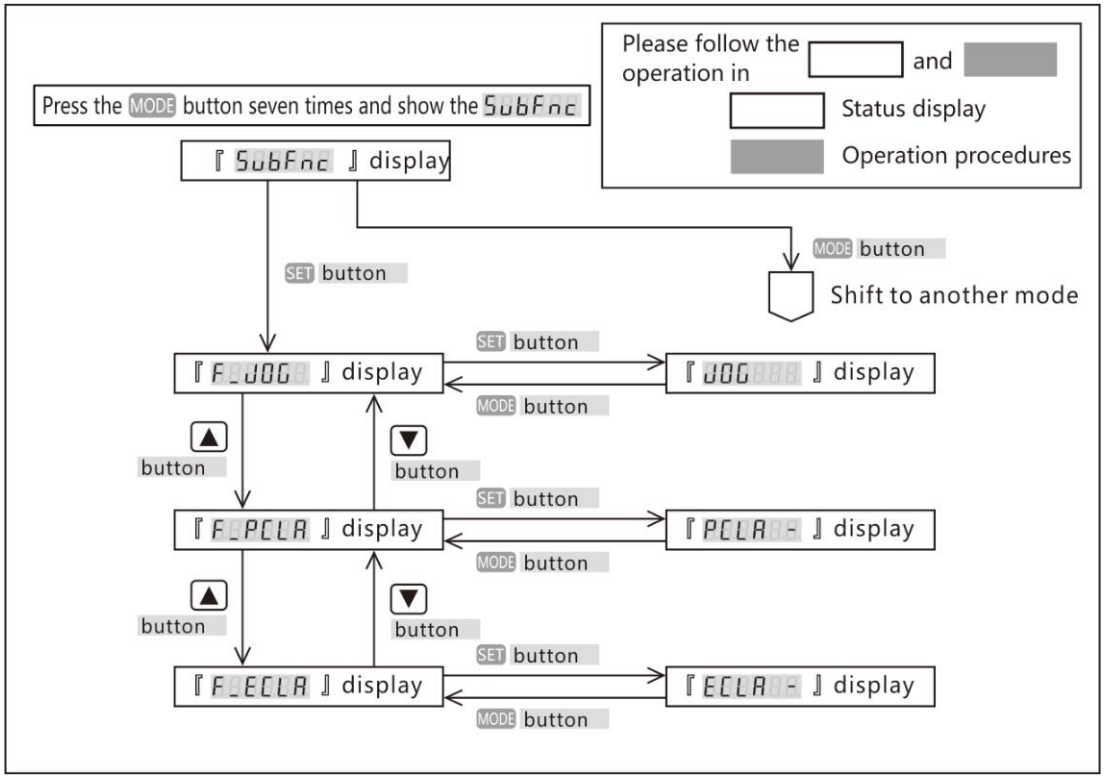

5.9.1 Drive connector terminal description

JOG function is function for test run without the commands output by the upper controller. Please use the test run function for the purpose of adjustment. For details.

Working conditions for JOG function

・The JOG function is available in the pulse command modes of position control and speed control mode. Control the machines according to the corresponding gain of control modes. Do not use the JOG function in the internal position command mode (point table, test run) and torque control mode of position control.

・When using JOG function in speed control mode/ internal speed command mode, the VCRUN1, VCRUN2, VCSEL1, VCSEL2 and VCSEL3 of parallel I/O input become invalid.

・Input the 24VDC control power and servo ON signal from I/O connector.

Operating procedures

1. Display the 『 F_JOG 』 according to the operating procedures as shown in Figure 5.9.1 Auxiliary function.

2. Set the following three parameters by the set panel .

For the details of parameters, please refer to [Chapter 6 Parameter Description].

Table 5.9.1 Relevant parameter of JOG function

No.	Parameters
385.0	JOG operation: Acceleration time
386.0	JOG operation: Deceleration time(※Note 1)
387.0	JOG operation: Target speed

3.Press SET button and show the 『 JOG 』.

4. Make the servo OFF by I/O

5. Long-press LEFT(◀) button and show the 『 SRLOFF 』. The alarm 『 Error 』 will occur if operating at the servo ON. If the alarm 『 Error 』 occurs at this time, press MODE MODE button and the display returns to 『 F_JOG 』and reoperate from procedures 3.

6. Press the UP ▲ button, the motor rotate in CCW direction; if Down ▼ button, in CW direction.

The motor rotates when pressing the button, and stops as releasing the button.

7. Make the servo OFF by I/O and 『SRL.OFF』 shows to end the JOG operation. Then press MODE button and show 『F_JOG』, which means the operation status changes from JOG to the general. If the servo is ON, the operation cannot change from JOG operation to general operation status and the alarm 『Error』 will occur.

Note 1) Please note that if the JOG operation deceleration time is set longer, the time from pressing the UP ▲ or Down ▼button to stopping the motor will become longer correspondingly.

Note 2) If press the UP ▲ or Down ▼button simultaneously, the motor will stop. If the unexpected operating status happens, switch off the main circuit power or make the servo OFF to stop the operation.

Figure 5.9.2

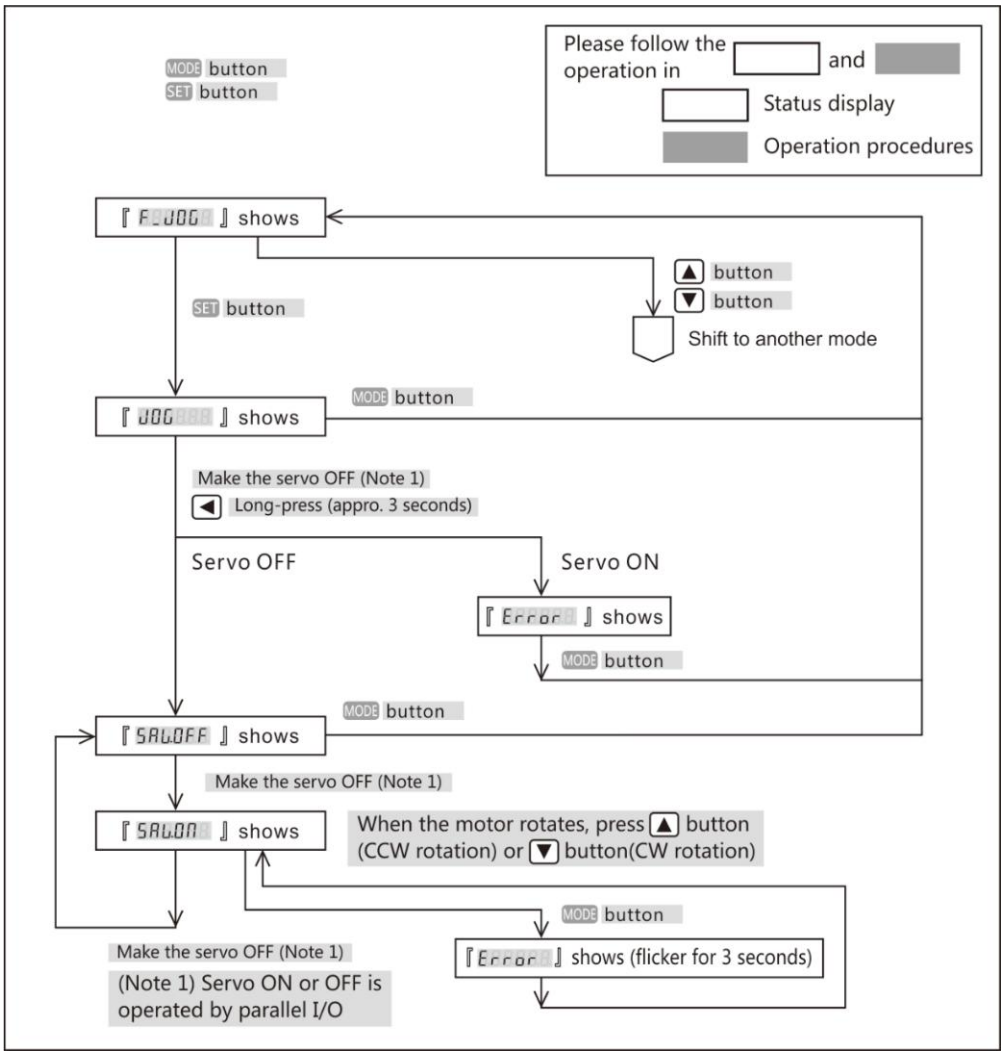

5.9.2 Parameter clearing function

This function is to return the parameters to the factory settings. After clearing the parameters, restart the power supply and the parameters will change to the factory settings.

The parameter clearing should be operated at the servo OFF. If the servo is ON, an alarm will occur『Error』.

Operation procedures

1. Operate as the procedures in section 4.9 Auxiliary function and display the 『F_PCLR』

2.Press the SET SET button and show the 『PCLR』

3. Long-press the LEFT ◀ button, then display the 『PCLR』 → 『------』 and flicker, then change to 『Finish』

4. Restart the power supply and the parameter clearing is done.

Figure 5.9.3

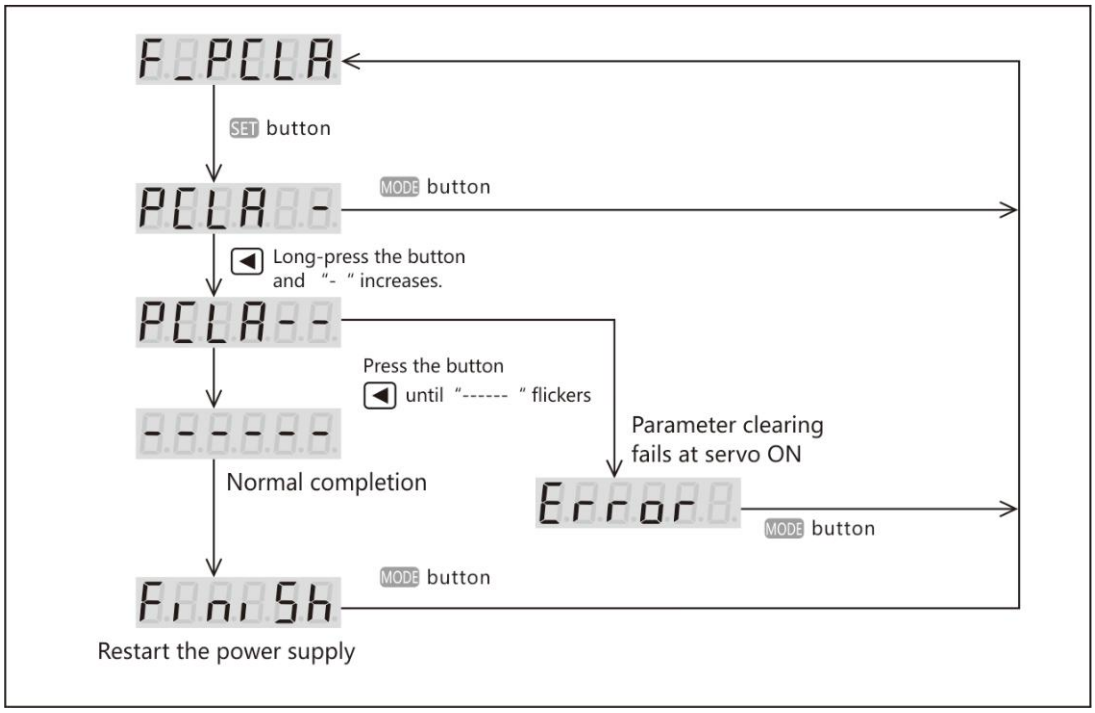

5.9.3 Encoder clearing function

For details, please refer to [Reference SV-E3 series absolute system].

6. Parameter Description

6.1 Parameter list

This section gives a detailed description of the displayed parameters on the panel.

The column of 「No.」is the parameter number. Two numbers separated by "/" are the numerator and denominator number of parameters. Take 034.0/036.0 as the example, 034.0 is the numerator number and 036.0 is the denominator number. [Basic setting] in Parameter list are the initial setting values determined by the device. [Adjustment] indicates gain and other parameters that need to be adjusted to get the expected operation. [Special setting] indicates the parameters set according to the actual needs. The parameters with 「r」displayed on the right side of parameter number, are the ones that need to restart the drive control power supply after saving. 「Yes」will be displayed in the parameters of 「Whether to restart 24VDC power supply」. After saving the parameters in 「Parameter saving mode」, 「Whether to restart 24VDC power supply」will be displayed for the parameters which are valid after restarting 24VDC power supply. For the models of 750W or less, the control power is supplied from external 24VDC. For the models of 1kW or more, the control power is supplied from internal power and please cut off 220V power of main circuit if restart needed.

<Notice>

Each parameter has its setting range, but it also depends on the setting value of other parameter. There are some parameters unable to set, even though they are in the setting range. The following is the interdependent parameter number.

No.102.0 Inertia ratio

No.103.0 Damping ratio

No.104.0 Conversion ratio of inertia ratio

No.115.0 Control gain 1 (Position control mode)

No.116.0 Control gain 2 (Position control mode)

No.117.0 Gain FF compensation 1（Position control mode）

No.118.0 Gain FF compensation 2（Position control mode）

No.119.0 Integral gain（Position control mode）

No.131.0 Control gain 1（Speed control mode）

No.132.0 Gain FF compensation 1（Speed control mode）

No.133.0 Integral gain（Speed control mode）

6.1.1 Parameters

Table 6.1.1 Parameters

Types	**Names**			**No.**
Common parameters	Control mode			2.0
	Command mode			3.0
	Operation mode			9.0
	Torque command range	Switch		144.0
		Value 1		147.0
		Value 2		148.0
	Torque limit output			144.1
	Delay time for Servo off			237.0
	Delay time for mechanical brake release			238.0
	Selection of an encoder system			257.0
	Encoder pulse output	Rotation direction		272. 1
		Division and multiplication	Numerator	276. 0
			Denominator	278. 0
RS-485 communication	Switch			8.0
	Address			4.0
	Communication speed			6.0
	Stop bit			6.1
	Parity			6.2
	Minimum response time			11.0
Error detection	Position error	Switch		65.0
		Value		87.0
		Delay time		89.0
	Speed error	Switch		65.1
		Value		90.0
		Delay time		91.0
	Encoder pulse output	Upper limit for frequency		285.0
		Delay time		286.0
	Instantaneous voltage drop	Delay time		305.0
Drive restriction options	Settings			67.0
	Deceleration method			67.1
	Stop status			67.2

	Keep position deviation counting		67.3
Deceleration stop	Method		224.0
	Release condition		224.1
	Operation time		226.0
	Cancel deceleration stop		227.0
	Power supply error	Switch	224.2
		Operation time	228.0
	Torque command range		151.0
Adjustment	Inertia ratio		102.0
	Damping ratio		103.0
	Auto tuning	Mode switch	110.0
		Project	110.1
	Position control mode	Control gain set	113.0
		Inertia condition	113.1
		Control level	114.0
		Control gain 1	115.0
		Control gain 2	116.0
		Gain FF compensation 1	117.0
		Gain FF compensation 2	118.0
		Integral gain	119.0
	Speed control mode	Control gain set	129.0
		Control level	130.0
		Control gain 1	131.0
		Gain FF compensation 1	132.0
		Integral gain	133.0
	Current control gain		193.0
Position command filter	Filter 1	Selection(*1)	66. 0
		Smoothing filter 1 average moving times	80. 0
		Notch frequency	74. 0
		Notch width	75. 0
		High frequency gain	76. 0
		Notch depth	79. 0
	Filter 2	Selection	82. 0
		Notch frequency	83. 0
		Notch width	84. 0
		High frequency gain	85. 0
		Notch depth	86. 0
	Filter 3	Selection	82. 1
		Notch frequency	357. 0
		Notch width	358. 0
		High frequency gain	359. 0
		Notch depth	360. 0
	Filter 4	Selection(*2)	66. 1

		Smoothing filter 1 average moving times	81. 0

*1) The marking method varies from the drive version. The version of 3. 5. 1. 0 or before is marked with [Selection of position command smoothing filter 1]

*2) The marking method varies from the drive version. The version of 3. 5. 1. 0 or before is marked with [Selection of position command smoothing filter 2]

Types	**Names**		**No.**
Torque command filter	Low-pass filter	Switch	160. 0
		Auto setting	160. 2
		Time constant	162. 0
	Notch filter	Switch	160. 1
		Frequency	168. 0
		Width	169. 0
		Depth	170. 0
Pulse command	Input pulse types		32. 0
	Rotation direction		32. 1
	Input logic		32. 3
	Division and multiplication	Interpolation	32. 2
		Numerator	34. 0
		Denominator	36. 0
	Input filter		33. 0
	Feedforward Delay compensation		66. 3
Positioning completion	Determination method		64. 0
	Detection	Range	68. 0
		Speed	69. 0
		Command input	70. 0
	Detection delay time		71. 0
Internal position	Operation mode		642. 0
	Overflow detection		643. 0
	Point table	Point No. output method	644. 0
		Operation of point No. 0	646. 3
		Command method	720. 0～
		Operation conditions	720. 1～
		Valid or Invalid	720. 3～
		Position	722. 0～
		Rotation speed	724. 0～
		Acceleration speed	726. 0～
		Deceleration speed	727. 0～
		Dwell time	728. 0～
		Positioning completion	729. 0～
Home position return	Home position DOG redetection operation		645. 3
	Moving direction		646. 0
	Sensor DOG polarity		646. 1
	Timeout limit	Switch	646. 2

		Time		659. 0
	Torque limit	Switch		647. 0
		Value		656. 0
	Home position return Press detection time			655. 0
	Creep switch			647. 1
	Operation speed			648. 0
	Creep speed			649. 0
	Acceleration/deceleration time			650. 0
	Home position travel distance			651. 0
	Home position data			653. 0
	Home position return Phase Z invalidation distance			657. 0
	Selection of home position base signal			645. 0
	Selection of encoder phase Z			645. 1
Analog speed	Offset	Adjustment		62. 2
		Value		60. 0
	Rotation direction			62.0
	Input filter	Switch		62. 1
		Numerator		48. 0
		Denominator		49. 0
	Input gain	Numerator		50. 0
		Denominator		51. 0
	Speed limit	CCW	Numerator	52. 0
			Denominator	53. 0
		CW	Numerator	54. 0
			Denominator	55. 0
	Smoothing filter	Switch		77. 0
		Average travel time		78. 0
Internal speed	Command method			388. 0
	Acceleration time			390. 0
	Deceleration time			391. 0
	Speed 1 to 8			392. 0~
Analog torque	Offset	Adjustment		302. 2
		Value		300. 0
	Rotation direction			302. 0
	Input filter	Switch		302. 1
		Numerator		288. 0
		Denominator		289. 0
	Input filter	Numerator		290. 0
		Denominator		291. 0
	Torque limit	CCW	Numerator	292. 0
			Denominator	293. 0
		CW	Numerator	294. 0
			Denominator	295. 0

	Speed limit	152. 0

Table 6.1.2 Parameter list

No	Parameter	Contents	Whether to restart control power supply
002.0r	[Basic setting] Control mode	Control mode selection. Note) Do not change when servo is ON. 0= Position control mode 1= Speed control mode 2= Torque control mode [Initial value] 0 (Position control mode) [Setting range] 0 to 2	Yes
003.0r	[Basic setting] Command mode selection	Command mode selection 0= Zero command (select in position control/ speed control mode) 1= Pulse command (Used in position control) 2= Analog command (Used in speed control) 3= Internal generation command (Used in speed control) [Initial value] 1 (Pulse train command) [Setting range] 0 to 3	Yes
004.0r	[Basic setting] Communication address	Set the communication address of servo drive. Set to “1” when not using RS-485 multi-station communication. If using multi-station communication, refer to 「RS-485 communication wiring」. Setting different values for each axis. [Initial value] 1 [Setting range] 1 to 32	Yes
008.0	[Basic setting] Selection of host communication mode	Select host communication mode. 0= Disable 1= RS-485 asynchronous serial communication When connecting RS-485 signal cable and using RS-485 asynchronous serial communication, select to “1”. If not, select to “0”. If the USB is irrelevant to this setting, it can communicate anytime. [Initial value] 0 (Disable) [Setting range] 0 or 1	No
009.0	[Basic setting] Operation mode selection	Select the operation mode. 0=I/O 1=Communication [Initial value] 0(I/O) [Setting range] 0 or 1	No
011.0	[Basic setting] RS485 communication minimum	Set the minimum response time for RS485 communication The response time of drive can be adjusted according to the minimum response time. For details, refer to [Communication time] of [Communication interface]. [Initial value] 3	Yes

<table>
<tr><td></td><td>response time</td><td>[Setting range] 0 to 255</td><td></td></tr>
<tr><td>032.0r</td><td>[Basic setting]
Pulse train command input mode</td><td>Select pulse signal type of pulse command input.
0= Pulse and direction: using pulse and direction input
1= Orthogonal phase difference: using orthogonal phase pulse (A-phase/B-phase) input
2= CCW/CW: using positive pulse and negative pulse
[Initial value] 0 (Pulse/direction)
[Setting range] 0 to 2</td><td>Yes</td></tr>
<tr><td>032.1r</td><td>[Basic setting]
Pulse train command Rotation direction</td><td>Select rotation direction of pulse command input
0: CCW addition counting
1: CCW subtraction counting

[Initial value] 1 (CCW addition counting)
[Setting range] 0 or 1</td><td>Yes</td></tr>
<tr><td>032.2r</td><td>[Basic setting]
With(out) use of automatic command interpolation for division/ multiplication</td><td>When setting command division/ multiplication, the command will be processed by smoothing interpolation automatically.
0= Disable
1= Enable
[Initial setting] 1 (Enable)
[Setting range] 0 or 1</td><td>Yes</td></tr>
<tr><td>032.3</td><td>[Basic setting]
Selection of Pulse train input logic</td><td>Select the logic for pulse train input.
0= Positive logic : Up counting from Low to High
1= Negative logic: Downing counting from High to Low
[Initial setting] 0 (Positive logic)
[Setting range] 0 or 1</td><td>Yes</td></tr>
<tr><td>033.0r</td><td>[Basic setting]
Pulse command input filter selection</td><td>The function of input filter is to reduce the fault caused by noise. Select the pulse width of passing pulse command input.
0= No filter
1= Pulse width 25ns
2= Pulse width 50ns
3= Pulse width 100ns
4= Pulse width 150ns
5= Pulse width 200ns
6= Pulse width 300ns
7= Pulse width 400ns
8= Pulse width 600ns
9= Pulse width 800ns
10= Pulse width 1000ns
11= Pulse width 1200ns
12= Pulse width 1600ns
13= Pulse width 2000ns
14= Pulse width 2300ns
15= Pulse width 3100ns

When pulse command is open collector circuit, it is recommended to set the best filter. The following table indicates the corresponding filter optimum value between input pulse frequency and pulse duty ratio. Select the best value according to input pulse frequency and pulse duty ratio.

<table><tr><td>Duty ratio (%) / Frequency</td><td>50</td><td>40</td><td>30</td><td>20</td><td>10</td></tr><tr><td>100kpps</td><td>12</td><td>11</td><td>10</td><td>8</td><td>6</td></tr><tr><td>200kpps</td><td>9</td><td>8</td><td>7</td><td>6</td><td>4</td></tr></table></td><td>Yes</td></tr>
</table>

<table>
<tr><td></td><td></td><td> 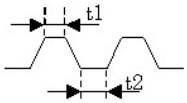

When the input frequency is high, please set the small passing pulse width. To improve interference immunity, please set the large passing pulse width.
[Initial setting] 4 (Passing pulse width is 150ns or less)
[Setting range] 0 to 15</td><td></td></tr>
<tr><td>034.0r
/ 036.0r</td><td>[Basic setting]
Division/ multiplication (Numerator / Denominator)</td><td>Set the parameters of position command pulse division/ multiplication.
When the number of upper command pulse and motor pulse per revolution is different, calculate in terms of [(Numerator) / (Denominator)=(Number of pulse per servo motor revolution) / (Number of host command pulse per revolution)
[Setting example]
The number of pulse per motor revolution is 131072[pulse/rev]. Numerator can be set 32768 by a quarter of 131072. Denominator can be set by a quarter of the number of upper command per revolution. The corresponding parameter setting of the number of upper command pulse per revolution is as follows.
<table>
<tr><td>Number of host command per revolution</td><td>Command division/ multiplication (Numerator)</td><td>Command division/ multiplication (Denominator)</td></tr>
<tr><td>131072</td><td>1000(Initial value)</td><td>1000(Initial value)</td></tr>
<tr><td>16384</td><td>32768</td><td>4096</td></tr>
<tr><td>10000</td><td>32768</td><td>2500</td></tr>
<tr><td>4096</td><td>32768</td><td>1024</td></tr>
<tr><td>4000</td><td>32768</td><td>1000</td></tr>
</table>
[Initial value] (Numerator / Denominator) =1000/1000
[Setting range] (Numerator) 1 to 65535, (Denominator) 1 to 65535.
Setting range of Division/ multiplication ratio is from 0.001 to 1000.Normal operation is not guaranteed while division/ multiplication ratio is beyond setting range.</td><td>Yes</td></tr>
<tr><td>048.0 /
049.0</td><td>[Adjustment]
Analog command input
Filter parameter
(Numerator / Denominator)</td><td>Low-pass filter parameter for smoothing analog speed command input.
It is valid when input filter selection (No.062.1) is set “1”,.
Parameter decrease→Smoothing effect becomes stronger, command traceability reduces.
Parameter increase→command traceability increases,， susceptible to interference
(Numerator / Denominator) the value must be less than 1.
(Numerator / Denominator) =1, filter invalid
[Initial setting] (Numerator / Denominator)= 16000/65535
[Setting range] 0～65535/1～65535</td><td>No</td></tr>
<tr><td>050.0 /
051.0</td><td>[Adjustment]
Analog command input
Gain
(Numerator / Denominator)</td><td>Gain of analog speed command input.
When (Numerator) / (Denominator)=1 and ±10V analog command voltage is input, the highest rotation speed of motor can be reached.
※As for the highest rotation speed of motor, refer to 「Basic specification」
According to different choice of symbol and polarity for analog command voltage, the rotation direction of motor is different.
Decreasing this value has the effect of decreasing proportional gain of position loop at</td><td>No</td></tr>
</table>

		upper controller. [Initial setting] (Numerator / Denominator)=1000/1000 [Setting range] 0～65535/1～65535	
052.0 / 053.0	[Basic setting] Analog speed command CCW speed limit threshold value (Numerator / Denominator)	Analog speed command CCW speed limit threshold value. Analog command CCW speed limit = (the highest speed of motor) * (threshold value(numerator))/ (threshold value(denominator)) [initial setting] (Numerator / Denominator)=5000/5000 [Setting range] 0～65535/1～65535	No
054.0 / 055.0	[Adjustment] Analog speed command CW speed limit threshold value (Numerator / Denominator)	Analog speed command CW speed limit threshold value. Analog command CW speed limits = (the highest speed of motor) * (threshold value(numerator))/ (threshold value(denominator)) [initial setting] (Numerator / Denominator)=5000/5000 [Setting range] 0～65535/1～65535	No
060.0	[Basic setting] Analog speed command fixed offset value	When using manual adjustment to adjust offset value of analog speed command, set the adjustment value. It's valid when the offset adjustment is selected to "1= manual adjustment". Adjust the corresponding analog speed command input to 0r/min at the 0V input voltage. <setting method>. 1. Servo ON (motor will rotate if offset exists) 2. When rotating at the speed of ±10r/min or less, set the value to ±50 to confirm the operation. (CCW direction, set to「-50」; CW direction, set to「+50」. 3. Set the offset value while observing the motor operation. (If rotate at CCW direction, setting values change in response to 「-direction」. If rotate at CW direction, setting values change in response to 「+direction」. [Initial value] 0 [Setting range] -32768/32768	No
062.0	[Basic setting] Analog speed command rotation direction	Select rotation direction of analog speed command. 0=Inputting negative voltage, the motor has CCW rotation; Inputting positive voltage, the motor has CW rotation. 1= Inputting positive voltage, the motor has CCW rotation; Inputting negative voltage, the motor has CW rotation. [Initial value] 1 (Inputting positive voltage, the motor has CCW rotation) [Setting range] 0 or 1	No
062.1	[Basic setting] Select analog speed command input filter	Select analog speed command input filter. Input filter constant can be set in No.048.0, No.049.0. 0= Disable 1=Enable (one IIR filter) [Initial value] 1 (Enable) [Setting range] 0 or 1	No

062.2	[Basic setting] Select offset adjustment type of analog speed command	Select offset adjustment of analog speed command. 0=Auto tuning 1=Manual tuning Auto tuning works under the voltage which corresponds to 0r/min of speed command while servo ON. Manual tuning means input offset manually to make sure input voltage 0Vcorresponds to speed command 0r/min. . Offset value can be adjusted by parameter No.60.0(fixed offset value). [Initial value] 1 (manual tuning) [Setting range] 0 or 1	No
064.0	[Basic setting] Judgment of positioning completion	Select the output form of positioning completion signal. 0=Position difference + speed 1=Position difference+ speed+ pulse command input(speed) When selecting 0, after the position difference is in the positioning completion range No.68.0 and speed is in the range of positioning completion speed No.69.0,, positioning completion signal will be output. When selecting 1, after the position difference, speed and pulse command input(speed) are all in the range of positioning completion range No.68.0 , positioning completion speed No.69.0 and positioning pulse train command input(speed) No.70.0 respectively, positioning completion signal will be output. The delay time from positioning completion to output positioning completion signal can be set in No.71.0. [Initial setting] 0 [Setting range] 0 or 1	No
065.0	[Special setting] With or without use of position difference error detection	Select whether to use position difference error detection. Usually set value to “1”.（Enable） Only when suing torque command limit, set to “0”. Set the position deviation value of error detection by No.87.0 and set the delay time from position error occurred to output stop by No.89.0. 0=Disable 1=Enable [Initial value] 1 (Enable) [Setting range] 0 or 1	No
065.1	[Special setting] With(out) use of speed deviation error detection	Select whether to use speed deviation error detection. Usually set value is “1”.(Enable) Only when suing torque command limit, set “0”. Set the speed deviation value of error detection by No.90.0 and set delay time from speed error occurred to output stop by No.91.0. 0= Disable 1=Enable [Initial value] 1 (Enable) [Setting range] 0 or 1	No
066.0r and 066.1r	[Adjustment] With(out) use of	Select position command smoothing filter1 (No.66.0) and position command smoothing filter 2 (No.66.1)	Yes

	position command smoothing filter 1 and position command filter 2	0=Disable 1=Enable Command will be smooth as shown below after using a smoothing filter. 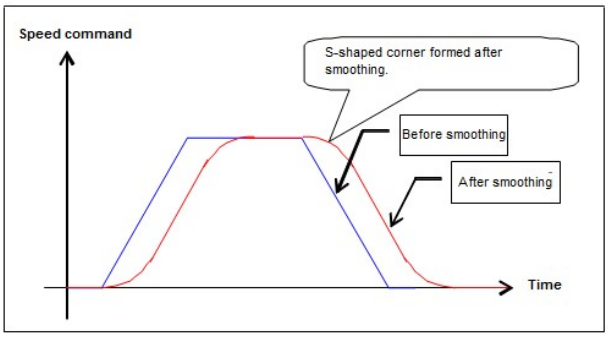 [Adjustment method] Used when command acceleration or deceleration are too fast. Used to suppress device resonance when positioning. Measuring the resonant frequency in torque command curve and setting a corresponding average movement number in position command smoothing filter1 moving average time No,80 or position command smoothing filter2 average movement number No.81, may inhibit resonance. The relation between resonant frequency and average movement number is stated under parameter specification of No.80 and No,81. [Notes] This parameter can be set after more than 1.5s when the command pulse input is 0. And the servo must be off while setting. If there is pulse input or residual pulse setting, position difference will occur. [Initial setting] Command smoothing filter 1 is ‘0”. (Not used) Command smoothing filter 2 is ‘1”.(Used) [Setting range] 0 or 1	
066.3	[Special setting] With(out) the Feed forward delay compensation in position control mode	Enable/Disable Feed forward delay compensation in position control mode. 0=Disable 1= Enable <Note> Generally set to “1”. Do not make the changes and cannot be done on setting panel. [Initial setting] 1 (Enable) [Setting range] 0 or 1	Yes
067.0r	[Adjustment] Selection of drive restriction options	Select the drive restriction options Note) Do not modify the parameter while the servo is ON. 0=Invalid 1=CW restriction. 2=CCW restriction. 3= CW/CCW restriction. [Initial setting] 0 (Invalid) [Setting range] 0 to 3	Yes
067.1	[Basic setting] Selection of deceleration	Select deceleration method at drive restriction input. Note) Do not modify the parameter while the servo is ON. When using deceleration method No.67.1 and stopping method No.67.2, please follow	No

<table>
<tr><td></td><td>method at drive restriction input</td><td>the following combination methods.
0=Free-run
1=Short brake
2= Prompt stop
<table>
<tr><td>Combination</td><td>Deceleration method No.67.1</td><td>Stopping method No.67.2</td></tr>
<tr><td>1</td><td>0: Free-run</td><td>0: Free-run</td></tr>
<tr><td>2</td><td>1: Short brake</td><td>0; Free-run</td></tr>
<tr><td>3</td><td>2: Prompt stop</td><td>1: zero clamp</td></tr>
<tr><td>4</td><td>2: Prompt stop</td><td>0: Free-run</td></tr>
</table>
[Initial setting] 1
[Setting range] 0 to 2</td><td></td></tr>
<tr><td>067.2</td><td>[Basic setting] Selection of stop status at drive restriction</td><td>Select stop status at drive restriction.
Note) Do not modify the parameter while the servo is ON.
When using deceleration method No.67.1 and stopping method No.67.2, please follow the above combination methods.
0= Free-run
1= zero clamp
[Initial setting] 1
[Setting range] 0 or 1</td><td>No</td></tr>
<tr><td>067.3</td><td>[Basic setting] Selection of position difference counter status at drive restriction</td><td>Select position difference counter status at drive restriction
Note) Do not modify the parameter while the servo is ON.
0= Keep
1=Clear
[Initial setting] 1
[Setting range] 0 or 1</td><td>No</td></tr>
<tr><td>068.0</td><td>[Basic setting] Positioning completion range</td><td>As the reference of outputting positioning completion signal to upper controller, this parameter is the pulse width for judging positioning completion.
The setting value should be less than the number of positioning judge pulse of upper controller.
[Initial value] 40[Pulse]（±40[pulse]）
[Setting range] 0 to 32767
 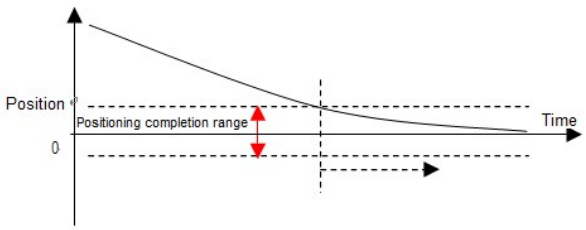
</td><td>No</td></tr>
<tr><td>069.0</td><td>[Basic setting]</td><td>As the reference of outputting positioning completion signal to upper controller, this</td><td>No</td></tr>
</table>

	Positioning completion speed	parameter is the speed limit for judging positioning completion. The setting value should be less than the number of speed limit of upper controller. [Initial value] 750W or less：2 [pulse/160μs] （±2 [pulse/160μs] ･･･5.72[r/min] 1kW or more ： 2 [pulse/200μs] （±2 [pulse/200μs]）･･･4.58[r/min] [Setting range] 0 to 32767 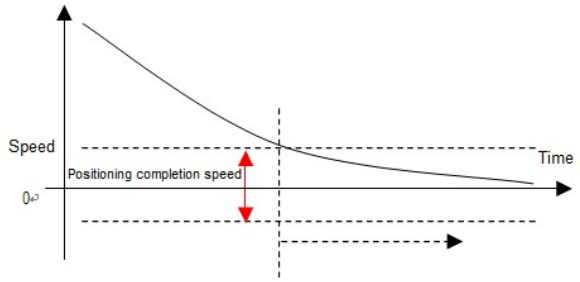 	
070.0	[Basic setting] Positioning completion pulse command input (speed)	As the reference of outputting positioning completion signal to upper controller, this parameter is the pulse command input(speed) for judging positioning completion [Initial setting] 750W or less： 0 [pulse/160μs] （±0 [pulse/160μs]） 1kW or more：0 [pulse/200μs] （±0 [pulse/200μs]） [Setting range] 0 to 32767 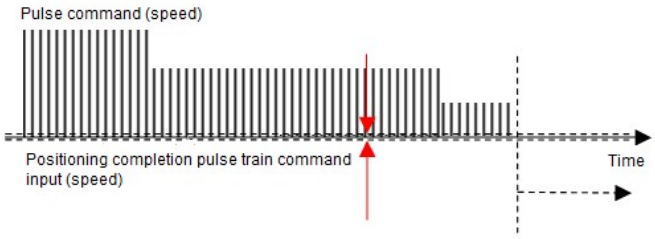 	No
071.0	[Basic setting] Delay time of positioning completion detection	Select the delay time from positioning completion to output signal to upper controller. [Initial value] 750W or less：20 [160μs]･･･3.2ms 1kW or more：16 [200μs]･･･3.2ms [Setting range] 0 to 65000 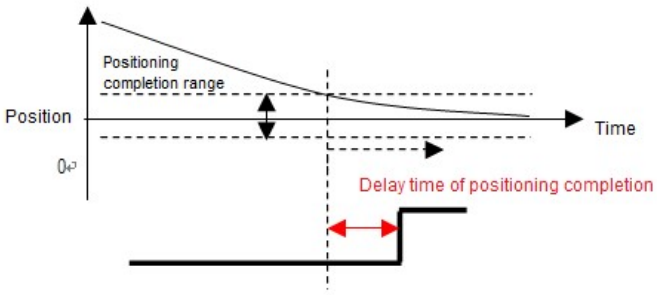 	No
077.0	[Adjustment] With(out) the use of speed command smoothing filter	Choose whether to use speed command smoothing filter. The average movement time can be set in No.78.0. 0=Disable 1=Enable [Initial value] 0	No

<table>
<tr><td></td><td></td><td>[Setting range] 0 or 1</td><td></td></tr>
<tr><td>078.0</td><td>[Adjustment]
Average movement time of speed command smoothing filter</td><td>Set the average movement time of speed command smoothing filter.
It can be used when No.77.0 is effective.
[Initial value] 100 [ms]
[Setting range] 1 to 1000</td><td>No</td></tr>
<tr><td>080.0r and 081.0r</td><td>[Adjustment]
Average movement number of position command smoothing filter 1 and average movement number of position command smoothing filter 2</td><td>Set the position command smoothing filter 1 to “1(Used)” in No.66.0 to make No.80.0 valid.
Set the position command smoothing filter 2 to “1(Used)” in No.66.1 to make No.81.0 valid.
When the setting value of average movement number increases, the acceleration/ deceleration will be smooth, but the response will be slow.
Setting filter 1, the average movement number can be set between 1 and 6250; setting filter 2, the average movement number can be set between 1 and 1250.
The average movement time can be represented by the following formula.
200～750W： (average movement time)=(average movement number) ×0.16ms
1k～2kW: (average movement time)=(average movement number) ×0.2ms
[Adjustment method]
● Smoothing will make positioning time longer in response to above average movement time. Please have settings within the permissible range..
● When resonant occurs at constant move after acceleration or positioning after deceleration, measuring the resonant frequency in torque command curve and setting a corresponding average movement number in position command smoothing filter1 moving average time No,80 or position command smoothing filter2 average movement number No.81, may inhibit resonance. The calculation of average movement number and its corresponding suppressed resonance frequency is shown below.
750W or less: Setting value of smoothing filter=6250/(suppressed vibration frequency[Hz])
1kW or more: Setting value of smoothing filter=5000/(suppressed vibration frequency[Hz])
<table>
<tr><td>Average movement number No.080.0, No.081.0</td><td>64</td><td>256</td><td>1024</td><td>4096</td></tr>
<tr><td>750W or less: suppressed vibration frequency(Hz)</td><td>100</td><td>23</td><td>6</td><td>1.5</td></tr>
<tr><td>1kW or more: suppressed vibration frequency(Hz)</td><td>80</td><td>20</td><td>5</td><td>1.2</td></tr>
</table>
● The vibration caused by gain FF compensation 2 can be suppressed by position command smoothing filter 2.
When using gain FF compensation 2 No.117.0, vibration can be reduced by using the average movement number of position command smoothing filter 1 and filter 2.
[Notes] This parameter can be set when the command pulse input is “0” for more than 1.5s and there is no command pulse input. If possible, it is recommended to turn off the servo. If you set the parameter when there is pulse input or residual pulse,</td><td>Yes</td></tr>
</table>

		position shift will occur. [Initial value] Filter 1: 25 for 200~750W, 20 for 1k～2kW Filter 2: 10 for 200~750W, 10 for 1k～2kW [Setting range] 1 to 6250 for filter 1, 1 to 1250 for filter 2.	
087.0	[Special setting] Position deviation error detection value	When set No.65.0 to “1(enable)”, it is valid to detect the position deviation errors. Normally it’s effective. When the position deviation exceeds the setting value, the output position deviation errors occur. It is more difficult to detect the position deviation if the value is greater. [Initial value] 196608[pulse] (※Equivalent to the number of 1.5 turns pulse) [Setting range] 0 to 2147483647.	No
089.0	[Special setting] Delay time of position deviation error detection	When set No.65.0 to “1(enable)”, it is valid to detect the position deviation errors. The time is from exceeding setting value 「Position deviation error detection value」 to outputting position deviation error signal. It takes longer from error occurred to error output when the value is greater. [Initial value] 200～750W: 250 [160μs]･･･40ms 1k～2kW: 200 [200μs]･･･40ms [Setting range] 0～32767	No
090.0	[Basic setting] Speed deviation error detection value	When set No.65.1 to “1(enable)”, it is valid to detect the speed deviation errors. Normally it’s effective. When the speed deviation exceeds setting detection value, speed deviation error occurs. It is more difficult to detect speed deviation error if the value is greater. [Initial value] 200～750W: 524[pulse/160μs] ･･･1499[r/min] 1k～2kW: 655[pulse/200μs] ･･･11499[r/min] [Setting range] 0 to 32767	No
091.0	[Special setting] Delay time of speed deviation error detection	When set No.65.1 to “1(enable)”, it is valid to detect the speed deviation error. Normally it is effective. The time is from exceeding setting value 「Speed deviation error detection value」 to output speed deviation error signal. It takes longer from error occurred to error output stopped when the value is greater. [Initial value] 200～750W: 250 [160μs] ･･･40ms 1k～2kW: 200 [200μs]･･･40ms [Setting range] 0 to 32767	No
102.0	[Adjustment] Inertia ratio	Set Inertia ratio by the device load . [Initial value] 250 [%] [Setting range] 100 to 3000	No
103.0	[Adjustment] Damping ratio	Set Damping ratio on the device side. When the friction and inertia ratio is very big, the change of damping ratio value may shorten the setting time. [Initial setting] 100 [%] [Setting range] 10 to 5000	No
110.0	[Adjustment] With or without the use of estimated	Setting of auto tuning mode. If the movement direction of machine connected to the motor is horizontal, select “standard mode”. If vertical, select “Unbalanced mode”.	No

	inertia ratio	1=Standard mode 1=Unbalanced mode [Initial value] 1 (Standard mode) [Setting range] 1 to 2	
110.1	[Adjustment] With(out) the use of real-time auto tuning	Select whether to use real-time auto tuning. 0 = Disable 1 = Enable and Apply Inertia ratio 2 = Enable and Apply Inertia ratio and Dumping ratio [Initial value] 0 (Disable) [Setting range] 0 to 2	No
113.0	[Adjustment] Control gain level (position control)	Set the control gain level in position control mode. If traceability to command is slow or rigidity of drive system is low, set a lower value; If traceability to command is rapid or rigidity of drive system is high, set a higher value. When setting this parameter, No. 115.0～119.0 will be set automatically and No.114.0 becomes invalid. [Initial value] 15 [Setting range] 5 to 45	No
113.1	[Adjustment] Inertia condition	Set the inertia condition of position control mode. 0= Can interchange with F/W version of 2.0.4.0 or prior 1= For the device of heavy load and low rigidity, or large load changes 2= Standard setting 3= For the device of light load and CW/CCW frequently [Initial value] 2 (Standard) [Setting range] 0 to 3	No
114.0	[Adjustment] Control level (position control)	Set control level of position control mode. If traceability to command is slow or rigidity of drive system is low, set the lower value; If traceability to command is rapid or rigidity of drive system is high, set the higher value. When setting this parameter, No. 115.0, No.116.0 will be set automatically and No.113.0 becomes invalid. When the inertia condition No.113.1 is set to “0”(servo drive version 2.0.4.0 or prior), the setting range is from 1 to 46. [Initial value] 15 [Setting range] 5 to 45	No
115.0	[Adjustment] Control gain 1 (position control)	Set the Control gain 1 at position control mode. Higher setting value can shorten the setting time. Set the Control gain 2 as the following values. [Initial value] 50 [rad/s] [Setting range] 5 to 1000	No
116.0	[Adjustment] Control gain 2 (position control)	Set the Control gain 2 at position control mode. Higher setting value can improve the traceability to the command. Too high setting value can cause overshoot and vibration. When No.113.0 control gain level or No.114.0 control level is adjusted to set automatically, sometimes the setting values will exceed the setting range. [Initial value] 200[rad/s] [Setting range] 80 to 5000	No
117.0	[Adjustment]	Set feed forward compensation ratio (speed) of the Control gain 1 in position control	No

	Gain FF compensation 1 (position control)	mode. After confirming inertia ratio, adjusting this parameter will shorten the setting time. Too high setting value will lead to overshoot. And too low setting value will make setting time longer. [Initial value] 10000[0.01%] [Setting range] 0 to 15000	
118.0	[Adjustment] Gain FF compensation 2 (position control)	Set feed forward compensation ratio (torque) of the control gain 2 in position control mode. It is suitable to adjust this parameter when it requires small following error and precise trajectory. After Gain FF compensation 1 shortens setting time, please increase this parameter value. If vibration occurs, adjusting No.81.0 position command smoothing filter 2 average movement times may suppress the vibration. [Initial setting] 0 [0.01%] [Setting range] 0 to 15000	No
119.0	[Adjustment] Integral gain (position control)	Setting integral gain in position control mode can suppress external interference. When the setting value is higher, the position deviation convergence of positioning setting will become fast. But if setting value is too high, vibration will occur. When No.113.0 control gain level or No.114.0 control level is adjusted to set automatically, sometimes the setting values will exceed the setting range. [Initial value] 160[rad/s] [Setting range] 45 to 5000	No
129.0	[Adjustment] Control gain level (speed control)	Select control gain level in speed control mode. If traceability to command is slow or rigidity of drive system is low, set the lower value; If traceability to command is rapid or rigidity of drive system is high, set the higher value. When setting this parameter, No. 131.0～133.0 will be set automatically and No.130.0 becomes invalid. [Initial value] 15 [Setting range] 1 to 46	No
130.0	[Adjustment] Control level (speed control)	Select control level in speed control mode. If traceability to command is slow or rigidity of drive system is low, set the lower value; If traceability to command is rapid or rigidity of drive system is high, set the higher value. When setting this parameter, No. 131.0 will be set automatically and No.129.0 becomes invalid. [Initial value] 15 [Setting range] 1 to 46	No
131.0	[Adjustment] Control gain 1 (speed control)	Set the control gain in speed control mode. It corresponds to proportional gain of speed control loop. [Initial value] 399[rad/s] [Setting range] 100 to 6000	No
132.0	[Adjustment] Gain FF compensation 1 (speed control)	Set feed forward compensation in speed control mode. The higher the setting value, the better the traceability to command. But Too high setting value may lead to overshoot or vibration [Initial value] 0 [0.01%] [Setting range] 0 to 15000	No
133.0	[Adjustment] Integral	Select integral gain in speed control mode. The higher the setting value, the smaller the speed change caused by external	No

	gain(speed control)	disturbance. [Initial value] 300[rad/s] [Setting range] 45 to 5000	
144.0	[Basic setting] With or without the use of torque command limit override	Select torque command limit value in No.147.0, No.148.0 Confirm the following items when using torque limit. ①「No.65.0 Selection of Position deviation error detection」, please set it to "0=Disable" ②「No.65.1 Selection of Speed deviation error detection」, please set it to "0= Disable" When the command deviation value is small, even though the torque limit is set to be valid, it will be OK to set ① or ② to "1(enable)". 0= Disable 1= Enable [Initial setting] 0 (Disable) [Setting range] 0 or 1	No
144.1	[Basic setting] Torque limit state output mode	Select the output condition for torque limit. 0= All conditions (Torque is limited by torque command limit value 1 (No.147.0), max. torque limit value of motor and torque limit value of home position return (No. 656.0), not limited by speed in torque control mode) 1= Torque command limit Override 1 (No.147.0) or 2 (No.148.0) 2= Torque command limit Override 2 (No.148.0) [Initial setting] 0 (All conditions) [Setting range] 0 to 2	No
147.0 148.0	[Basic setting] Torque command limit override 1, 2	It is valid when No.144.0 torque command limit override is set to "1(enable)". Set torque command limit override relative to rated torque ratio. Tow torque limits could be set. [Initial value] 3000[0.1%] for torque limit 1; 2000[0.1%] for torque limit 2 [Setting range] 0 to 65535	No
151.0	[Basic setting] Torque command limit override at prompt stop	Set the torque command limit override relative to rated torque, if the stop type in No.224.0 is set to "2=prompt stop" when servo is OFF. [Initial value] 5000[0.1%] (When set 3000 or more, the limit value of max. torque command is 300%. If the setting value is bigger than 1000 , overload error will occur according to overload characteristics specified time. [Setting range] 0 to 65535	No
152.0	[Basic setting] Analog torque command speed limit value	Set Speed limit value of analog torque control mode. [Initial value] Max. speed of the motor [Setting range] 0 to 10000	No
160.0	[Adjustment]	Select torque command low-pass filter.	No

	Selection of torque command low-pass filter	0=No filter 1= Preliminary IIR filter [Initial value] 1 (Preliminary IIR filter) [Setting range] 0 or 1	
160.1	[Adjustment] Torque command Selection of whether to use notch filter	Whether the notch filter is used to set the torque command. 0=Disable 1=Enable [Initial value] 0 (Disable) [Setting range] 0 or 1	No
160.2	[Adjustment] Auto setting ON/OFF for Torque command Low-pass filter	Select whether to use the auto setting for torque command low-pass filter in control gain level (No. 113 and No. 129). 0 = Auto setting OFF 1 = Auto setting ON [Initial value] 1 (Auto setting ON) [Setting range] 0 or 1	No
162.0	[Adjustment] Torque command preliminary filter time constant for Low-pass filter	Set the torque command preliminary filter time constant for Low-pass filter [Initial value] 20 [0.01ms] [Setting range] 0 to 65535	No
168.0	[Adjustment] Torque command notch filter frequency	Set Notch filter notch frequency of Torque command [Initial value] 5000[Hz] [Setting range] 0 to 5000	No
169.0	[Adjustment] Torque command Notch filter width	Set notch filter width of torque command. Set the ratio relative to a frequency band with 0 notch depth and -3[dB] attenuation rate. The larger the value, the greater the width of the notch [Initial value] 8 [Setting range] 0 to 16	No
170.0	[Adjustment] Torque command Notch filter depth	Set the notch depth at the notch frequency of torque command notch filter, Set the I/O ratio of notch frequency. When the setting value is 0, the notch frequency input is completely cut off. When the setting value is 256, the notch frequency input is completely through. The notch depth becomes shallow when the value is bigger. [Initial value] 0 [Setting range] 0 to 256	No
224.0	[Basic setting] Type selection deceleration stop at servo OFF	Select the deceleration stop type when the alarm occurs or servo ON signal is off in motor revolution. 0=No brake 1=Short brake mode 2= Prompt stop [Initial value] 1 (Short brake mode) [Setting range] 0 to 2	No
224.1	[Basic setting] Deceleration stop	Select cancellation reasons for deceleration stop at servo OFF 0 = Operating time	No

	at Servo off: cancelation reasons	1 = Rotations of cancelation or operating time [Initial value] 1 (Rotations of cancelation or operating time) [Setting range] 0 or 1	
224.2	[Basic setting] Use of a deceleration stop in case of control power supply voltage drop	Enable/Disable Deceleration Stop when the voltage from a control power supply drops by No. 228.0. 0 = Disable 1 = Enable [Initial value] 1 (Enable) [Setting range] 0 or 1	No
226.0	[Basic setting] Deceleration stop : operating time at servo off	Set the operating time for deceleration stop at servo OFF. (If “0(No brake)” is set to No.224, this parameter is invalid.) [Initial value] 200W～750W: 313 [160μs] ･･･50ms, 1kW～2kW: 250 [200μs] ･･･50ms [Setting range] 0 to 16383	No
227.0	[Basic setting] Cancellation speed of deceleration stop and brake cancellation OFF at servo OFF.	Set the cancellation speed of deceleration stop at servo OFF. It sets the speed of brake OFF cancellation. (If “0(No brake)” is set to No.224.0 and “0(Operation time)” set to No.224.1, this parameter is invalid.) [Initial value] 200W～750W: 17[pulse/160μs] ･･･50r/min, 1kW～2kW: 22[pulse/200μs] ･･･50r/min [Setting range] 0 to 32767	No
228.0	[Basic setting] Operating time of deceleration stop at control power supply voltage drop	Set the operating time of deceleration stop at control power supply voltage drop in motor rotation. [Initial value] 62 [160μs] ･･･10ms [Setting range] 0 to 16383 [ms]	No
237.0	[Basic setting] Delay time at servo OFF	Set the delay time between getting the input signal of Servo OFF and motor excitation OFF. (The disconnection of COM2 and SVON terminal indicates the servo ON input signal is OFF.) [Initial value] 200W～750W: 0[160μs] ･･･0ms, 1kW～2kW: 0[200μs] ･･･0ms [Setting range] 0 to 3125	No
238.0	[Basic setting] Delay time of brake release	Set the delay time from motor excitation start to brake release output signal (MBRK) ON. (The connection of COM2 and SVON terminal indicates the brake release output signal is ON.) [Initial value] 200W～750W: 25[pulse/160μs], 1kW～2kW: 20[pulse/200μs] [Setting range] 0 to 3125	No
257.0	[Basic setting] Selection of an encoder system	Select an option for Absolute system or Incremental system. 0 = Incremental system 1 = Absolute system (multi-rotation counter overflow detection disabled) 2 = Absolute system (multi-rotation counter overflow detection enabled)	Yes

		[Initial value] 0 (Incremental system) [Setting range] 0 to 2	
272.1r	[Basic setting] Encoder output rotation direction	Set the rotation direction of encoder output. 0 = Down counting in the case of CCW rotation 1 = Up counting in the case of CCW rotation [Initial value] 1 (Up counting in the case of CCW rotation) [Setting range] 0 or 1	Yes
276.0r / 278.0r	[Basic setting] Division and multiplication of encoder pulse output(Numerator / Denominator)	Set the division and multiplication of encoder pulse output. When the 1-roration pulse number of encoder and the motor is different, set it to 'Numerator / Denominator =1-roration pulse number of encoder/ 1-roration pulse number of motor. If the output Z-phase pulse width is narrow and the upper control device cannot identify it correctly, we can reduce the division and multiplication ratio or speed to increase the pulse width by encoder pulse output division and multiplication No. 276. 0 and 278. 0. [Pulse width]= 1/ rotation speed (division/ multiplication ratio × 217) [Initial value] (Numerator)/ (Denominator)=1000/8000 [Setting range] (Numerator) 1～65535；(Denominator)1～65535 Frequency division/multiplication could be set to 1/32768 to 1. But it's necessary that [encoder resolution] × [Frequency division/multiplication] = [multiples of 4] and output frequency must less than 4Mpps(Maximum value).	Yes
288.0 / 289.0	[Adjustment] Analog torque command input filter (Denominator /Numerator)	This parameter is for the low-pass filter that smooths analog torque command input. It's valid when No.302.1 =1(enable). When the value is small, the smoothing becomes stronger, but the traceability to command drops. When the value is bigger, the traceability to command improves, but it is easy to be disturbed. Numerator / Denominator cannot exceed "1". If Numerator / Denominator=1, no filtering. [Initial value] Numerator / Denominator= 16000/65535 [Setting range] 0 to 65535/1 to 65535	No
290. 0 / 291. 0	[Adjustment] Analog torque command input gain (Denominator /Numerator)	Set Analog torque command input gain. Input of Analog command voltage =-10V or +10V with (Numerator)/(Denominator)=1 attains motor peaks torque. Motor rotation direction differs according to the selection of analog command voltage symbols and characteristics. ※For the details of peaks torque, refer to [Basic specification]. [Initial value] (Numerator) / (Denominator) = 3100/3100 (Varies with different motor models) [Setting range] 0 to 65535/1 to 65535	No
292. 0/ 293. 0	[Basic setting] Analog torque command CCW torque limit	Set Analog torque command CCW torque limit Override Analog command CCW torque limit =motor peak torque × (Override (Numerator)/Override(Denominator)) [Initial value] (Numerator) / (Denominator) = 3100/3100 (Varies with motor models)	No

	Override (Denominator/ Numerator)	[Setting range] 0 to 65535/1 to 65535	
294. 0/ 295. 0	[Basic setting] Analog torque command CW torque limit Override	Set Analog torque command CW torque limit Override Analog command CW torque limit =motor peak torque × (Override (Numerator)/Override(Denominator)) [Initial value] (Numerator) / (Denominator) = 3100/3100 (Varies with motor models) [Setting range] 0 to 65535/1 to 65535	No
300. 0	[Basic setting] Analog torque command Fixed offset value	Set Analog torque command Fixed offset value. This parameter is valid when No.302.2 =1. If the input voltage is 0V, the state of analog torque command input is 0%. <Setting method> 1. Servo ON (The motor rotates automatically if offset deviation occurs) 2. Observe the torque command value, and set offset value. [Initial value] 0 [Setting range] -32768 to 32767	No
302. 0	[Basic setting] Analog torque command Rotation direction	Set Rotation direction of Analog torque command input. 0 = CCW rotation by negative input voltage，CW rotation by Positive input voltage 1 = CCW rotation by positive input voltage，CW rotation by negative input voltage [Initial value] 1 (CCW rotation by positive input voltage) [Setting range] 0 or 1	No
302. 1	[Basic setting] Analog torque command Input filter option	Enable/Disable Input filter for Analog torque command. It can be done by No. 288. 0 and No. 289. 0. 0 = Disable 1 = Enable [Initial value] 1 [Setting range] 0 or 1	No
302. 2	[Basic setting] Analog torque command Offset adjustment method	Select Offset adjustment method of Analog torque command. Auto tuning is that the input voltage can make the torque command 0% at servo ON. Manual tuning is to input offset value by manual to make torque command 0% at input voltage 0V. Offset value can be adjusted by No.300.0 (Analog torque command Fixed offset value) 0 = Auto tuning 1 = Manual tuning [Initial value] 1 (Manual tuning) [Setting range] 0 or 1	No
385. 0	[Basic setting] JOG operation: Acceleration time	Set Acceleration time for the JOG operation This parameter set a duration for the speed command to accelerate from 0 rpm to 1000rpm. [Initial value] 1000[ms] [Setting range] 0 to 60000[ms]	No
386. 0	[Basic setting] JOG operation: Deceleration time	Set Deceleration time for the JOG operation This parameter set a duration for the speed command to accelerate from 1000 rpm to 0rpm.	No

<table>
<tr><td></td><td></td><td>[Initial value] 1000[ms]
[Setting range] 0 to 60000[ms]</td><td></td></tr>
<tr><td>387. 0</td><td>[Basic setting]
JOG operation:
Target speed</td><td>Set a target speed of the JOG operation.
[Initial value] 300[r/mi n]
[Setting range] For 50W～100W：0～6300[r/mi n]
For 200W～400W：0～5000[r/mi n]
For 750W: 4500[r/mi n]
For 1kW～2kW：0～3000[r/mi n]
Note) Alarm occurs when it exceeds max. speed. Do not exceed the max.speed.</td><td>No</td></tr>
<tr><td>388.0</td><td>[Basic setting]
Selection of
Internal speed
command type</td><td>It is valid when control mode No.2.0 is set to “1=speed control mode” and command mode selection No.3.0 is set to “3=Internal generation command” . Select command type of internal speed command. No.390.0 and No.391.0 are used to set acceleration/deceleration time of internal speed command. No.392.0～399.0 are used to set the target speed.
0 = zero command input
1 = internal speed command(trapezoid speed command with 8 phases)
[Initial value] 0
[Setting range] 0 or 1</td><td>No</td></tr>
<tr><td>390.0</td><td>[Basic setting]
Internal speed
command
Acceleration time</td><td>It is valid when control mode No.2.0 is set to “1=speed control mode” , command mode selection No.3.0 is set to “3=Internally generated command” , and internal speed command type No.388.0 is set to “1= trapezoidal speed command” . Set the acceleration time of internal speed command input. Set the time of speed command from 0rpm to 1000rpm. No.391.0 is used to set internal speed command deceleration time. No.392.0～399.0 are used to set the target speed.
[Initial value] 1000 [ms]
[Setting range] 0 to 60000</td><td>No</td></tr>
<tr><td>391.0</td><td>[Basic setting]
Internal speed
command
Deceleration time</td><td>It is valid when control mode No.2.0 is set to “1=speed control mode” , command mode selection No.3.0 is set to “3=Internal generation command” , and internal speed command type No.388.0 is set to “1= trapezoidal speed command” . Set the deceleration time of internal speed command input. Set the time of speed command from 1000rpm to 0rpm. No.390.0 is used to set internal speed command acceleration time. No.392.0～399.0 are used to set the target speed.
[Initial value] 1000 [ms]
[Setting range] 0 to 60000</td><td>No</td></tr>
<tr><td>392.0
393.0
394.0
395.0
396.0
397.0
398.0
399.0</td><td>[Basic setting]
Internal speed
command
Target speed 1
Target speed 2
Target speed 3
Target speed 4
Target speed 5
Target speed 6
Target speed 7</td><td>It is valid when control mode No.2.0 is set to “1=speed control mode” , command mode selection No.3.0 is set to “3=Internal generation command” , and internal speed command type No.388.0 is set to “1= trapezoidal speed command” . Internal speed command acceleration/deceleration time is set in No.390.0 and No.391.0. Set 8-phase target speed of internal speed command input. The switch of target speed can be realized by following combination of 8pin, 9pin and 10pin in CN1.
<table>
<tr><td>Target speed</td><td>I5(8pin in CN1)</td><td>I6(9pin in CN1)</td><td>I7 (10pin in CN1)</td></tr>
<tr><td>1</td><td>Open</td><td>Open</td><td>Open</td></tr>
<tr><td>2</td><td>Short circuited</td><td>Open</td><td>Open</td></tr>
<tr><td>3</td><td>Open</td><td>Short circuited</td><td>Open</td></tr>
</table></td><td>No</td></tr>
</table>

<table>
<tr><td></td><td>Target speed 8</td><td>
<table>
<tr><td>4</td><td>Short circuited</td><td>Short circuited</td><td>Open</td></tr>
<tr><td>5</td><td>Open</td><td>Open</td><td>Short circuited</td></tr>
<tr><td>6</td><td>Short circuited</td><td>Open</td><td>Short circuited</td></tr>
<tr><td>7</td><td>Open</td><td>Short circuited</td><td>Short circuited</td></tr>
<tr><td>8</td><td>Short circuited</td><td>Short circuited</td><td>Short circuited</td></tr>
</table>
[Initial value]
Target speed 1: 500 [r/min]
Target speed 2: 1000 [r/min]
Target speed 3: 1500 [r/min]
Target speed 4: 2000 [r/min]
Target speed 5: 2500 [r/min]
Target speed 6: 3000 [r/min]
Target speed 7: 4000（200W～750W motor）[r/min]
3000（1KW～2KW motor）[r/min]
Target speed 8: 5000（200W～400W motor）[r/min]
4500（750W motor）[r/min]
3000（1KW～2KW motor）[r/min]
[Setting range] 0 to the highest speed of motor</td><td></td></tr>
<tr><td>642. 0</td><td>[Basic setting]
Internal speed command - Operation mode</td><td>Set Operation mode for position control mode and internal generation command.
0 = Point Table
1 = Communication operation
2 = Manual pulse input
[Initial value] 1 (Communication operation)
[Setting range] 0 to 2</td><td>No</td></tr>
<tr><td>643. 0</td><td>[Special setting]
Internal speed command - Overflow detection option</td><td>Enable/Disable Internal position command Overflow detection function.
0 = Disable
1 = Enable
To prevent the absolute position from disappearing when the target position exceeds the absolute position range in Point table or communication operation.
When “1 = Enable” is set and the target position (ABS position command) in operation command exceeds absolute position, the alarm of internal position command overflow will occur. When “0 = Disable” is set and the target position exceeds absolute position, it can implement relative operation, not the absolute operation. The relative operation is that the point table operation command method is set to the operation of relative value and test-run. The absolute operation is that the point table operation command method is set to the operation of absolute value.
[Initial value] 1
[Setting range] 0 to 1</td><td>Yes</td></tr>
<tr><td>644. 0</td><td>[Special setting]
Point No. output method</td><td>Set Point No. output method from user I/O output to PM1...3 in positioning operation.
0 = Output Operation start point at Operation start
1 = Output Operation start point at Operation end
2 = Output each point No.at each operation start
[Initial value] 1 (Output Operation start point at Operation end)
[Setting range] 0 to 2</td><td>No</td></tr>
</table>

645. 0	[Special setting] Base signal 1 selection for Home position	Select Base signal 1 at determine Home position. 0 = Arbitrary position 1 = Stopper 2 = Home position DOG front end [Initial value] 2 (Home position DOG front end) [Setting range] 0 to 2	No
645. 1	[Special setting] Base signal 2 selection for Home position	Set another base signal(Base signal 2)for home position after detecting Base signal 1. 0 = None 1 = Encoder Phase Z [Initial value] 0 (None) [Setting range] 0 to 1	No
645. 3	[Special setting] Home position Base signal 1 redetection	Set the Base signal 1 redetection in creep speed after detecting home position DOG front end. 0 = Disable 1 = Enable [Initial value] 0 (None) [Setting range] 0 to 1	No
646. 0	[Special setting] Home position return direction	Set Home position return direction. 0 = CCW direction 1 = CW direction [Initial value] 0 (CCW direction) [Setting range] 0 to 1	No
646. 1	[Basic setting] Home position sensor input polarity	Set Home position sensor input polarity. 0 = When OFF, detect Home position DOG front end 1 = When ON, detect Home position DOG front end [Initial value] 0 (When OFF, detect Home position DOG front end) [Setting range] 0 to 1	No
646. 2	[Basic setting] Home positon return Timeout option	Enable/Disable Home position return Timeout. 0 = Disable 1 = Enable [Initial value] 1 (Enable) [Setting range] 0 to 1	No
646.3	[Basic setting] Point No.0 function selection	Select a function for Point No.0 when PCSTART1 is put into user I/O in forward start. 0 = Return to home position 1 = Point table operation [Initial value] 0 (Return to home position) [Setting range] 0 to 1	No
647. 0	[Basic setting] Home position return Torque limit option	Select whether to switch the torque limit value of home position return to home position return limit value. 0 = Disable 1 = Enable The torque limit detected by stopper is irrelative to the setting of this parameter in using home position return of stopper.	No

		[Initial value] 0 (Disable) [Setting range] 0 to 1	
647. 1	[Basic setting] Action at home position return completion	Select " 1= Move" from home position base signal 1 detection to home position completion. 0 = No move 1 = Move [Initial value] 0 (No move) [Setting range] 0 to 1	No
648. 0	[Basic setting] Home position return Speed	Set the speed after the home position base signal 1 is detected. [Initial value] 500[rpm] [Setting range] 1 to Max. speed of motor	No
649. 0	[Basic setting] Home position return Creep speed	Set the creep speed after the home position base signal 1 is detected. [Initial value] 10[rpm] [Setting range] 1 to Max. speed of motor	No
650. 0	[Basic setting] Home position return Acceleration/Deceleration time	Set Acceleration/Deceleration time for Home position return This parameter sets Acceleration time and Deceleration time per 1000rpm. If the load inertia ratio is 10 times or more, set up a value more than the initial value of 30. Otherwise, vibration will occur. [Initial value] 30[ms/1000rpm] [Setting range] 0～to 5000	No
651. 0	[Special setting] Home position Return Shift-to-home-position quantity	Set shift quantity from the position where the Base signal was detected to the home position. [Initial value] 0 [Command unit] [Setting range] 0 to 1,000,000,000	No
653. 0	[Special setting] Home position return Home position data	Set a position at the time of home position return complete. [Initial value] 0 [Command unit] [Setting range] -1,000,000,000 to 1,000,000,000	No
655. 0	[Special setting] Home position return Press detection time	Set Torque limit detection at the time of press home position return. [Initial value] 100 [ms] [Setting range] 5 to 1,000	No
656. 0	[Special setting] Home position return Torque limit value	Set Torque limit value at the time of home position return. This value is measured in terms of proportion to rated torque. This setting value is the torque limit value of press home position return. [Initial value] 500[0.1%] [Setting range] 10 to 3,000	No
657. 0	[Special setting] Home position return Phase Z invalidation distance	Set a distance from the positon where Base signal 1 for home position is detected to the position where Phase Z detection starts. [Initial value] 0 [Command unit] [Setting range] 0 to 1,000,000,000	No

659. 0	[Special setting] Home position return Timeout Time	Set Home position return Timeout Time. [Initial value] 60,000[10ms] [Setting range] 0 to 60,000	No

6.2 Parameter list for point table

Table 6.2.1 Parameter list for point table

Point No.	Position [Command pulse]	Rotation speed [r/min]	Acceleration time [ms]	Deceleration time [ms]	Command method [-]	Dwell time [ms]	Running operation [-]	Positioning completion [Encoder pulse]	valid/ Invalid [-]
0	No.722.0	No.724.0	No.726.0	No.727.0	No.720.0	No.728.0	No.720.1	No.729.0	No.720.3
1	No.742.0	No.744.0	No.746.0	No.747.0	No.740.0	No.748.0	No.740.1	No.749.0	No.740.3
2	No.762.0	No.764.0	No.766.0	No.767.0	No.760.0	No.768.0	No.760.1	No.769.0	No.760.3
3	No.782.0	No.784.0	No.786.0	No.787.0	No.780.0	No.788.0	No.780.1	No.789.0	No.780.3
4	No.802.0	No.804.0	No.806.0	No.807.0	No.800.0	No.808.0	No.800.1	No.809.0	No.800.3
5	No.822.0	No.824.0	No.826.0	No.827.0	No.820.0	No.828.0	No.820.1	No.829.0	No.820.3
6	No.842.0	No.844.0	No.846.0	No.847.0	No.840.0	No.848.0	No.840.1	No.849.0	No.840.3
7	No.862.0	No.864.0	No.866.0	No.867.0	No.860.0	No.868.0	No.860.1	No.869.0	No.860.3
8	No.882.0	No.884.0	No.886.0	No.887.0	No.880.0	No.888.0	No.880.1	No.889.0	No.880.3
9	No.902.0	No.904.0	No.906.0	No.907.0	No.900.0	No.908.0	No.900.1	No.909.0	No.900.3
10	No.922.0	No.924.0	No.926.0	No.927.0	No.920.0	No.928.0	No.920.1	No.929.0	No.920.3
11	No.942.0	No.944.0	No.946.0	No.947.0	No.940.0	No.948.0	No.940.1	No.949.0	No.940.3
12	No.962.0	No.964.0	No.966.0	No.967.0	No.960.0	No.968.0	No.960.1	No.969.0	No.960.3
13	No.982.0	No.984.0	No.986.0	No.987.0	No.980.0	No.988.0	No.980.1	No.989.0	No.980.3
14	No.1002.0	No.1004.0	No.1006.0	No.1007.0	No.1000.0	No.1008.0	No.1000.1	No.1009.0	No.1000.3
15	No.1022.0	No.1024.0	No.1026.0	No.1027.0	No.1020.0	No.1028.0	No.1020.1	No.1029.0	No.1020.3

7. Timing chart

7.1 Power ON

Figure 7.1.1 Power ON

Control power (24VDC)		Input	ON OFF	– –
Main circuit AC power	L1, L2	Input	ON OFF	– –
Power ready PRDY		(Internal)	ON OFF	– –
Servo ready SRDY	O7	Output	ON OFF	C O
Servo ONSVON	I1	Input	ON OFF	C O
Internal alarm status		(Internal)	ERROR OK	– –
Alarm status ALM	O8	Output	ON OFF	C O

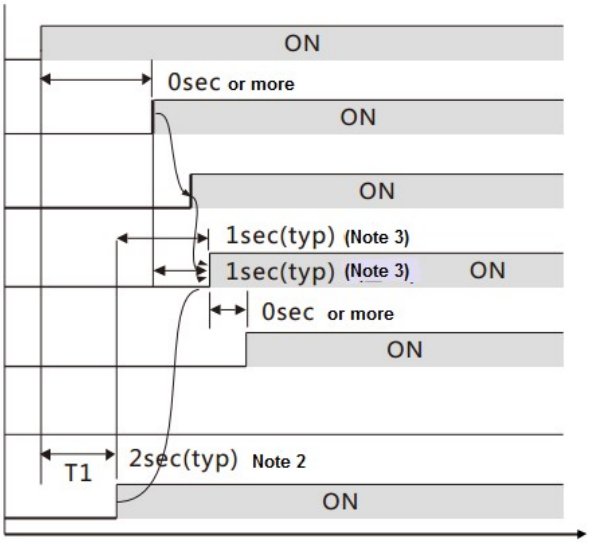

Note 1) About I/O status, “C” indicates the internal output circuit contact or external contact is close, while “O” means open.

Note 2) After the parameters are cleared, 5sec is needed for T1 because of parameter initialization.

Note 3) When /ERROR and main circuit power supply PRDY is ON, S-RDY is ON.

7.2 Servo OFF→ON

Main circuit AC power	L1, L2	Input	ON OFF	– –
Servo ready SRDY	O7	Output	ON OFF	C O
Servo ON SVON	I1	Input	ON OFF	C O
Internal alarm status	–	Internal	ERROR OK	– –
Motor excitation status	–	Internal	ON OFF	– –
Deceleration stop status	–	Internal	ON OFF	– –
Servo status SERVO	O2	Output	ON OFF	C O
Brake release MBRK	O1	Output	ON OFF	C O
Alarm status ALM	O8	Output	ON OFF	C O
Motor rotation speed	–	–	–	– 0rpm

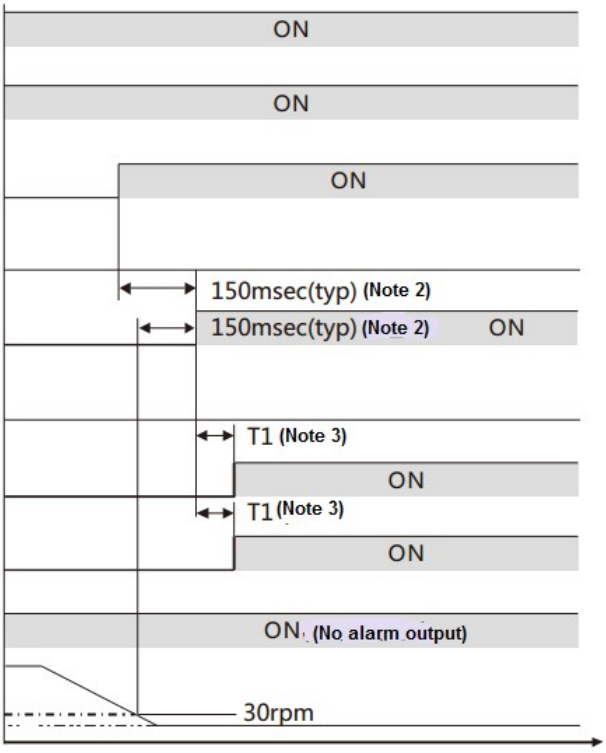

Note 1) About I/O status, “C” indicates the internal output circuit contact or external contact is close, while “O” means open.

Note 2) The servo can be not ON when motor speed is less than 30rpm..

Note 3) T1 can be set in parameter No.238.0. (Initial value 4msec, value range: 0 to 500msec)

7.3 Servo stop

7. 3. 1 Servo ON→OFF（motor stops）

When servo OFF, the deceleration stop release condition is to reach the speed release, or after specified running time(Parameter No.224.0=1, initial setting) , the motor speed is below the servo OFF deceleration stop release speed (Parameter No.227.0=50rpm, initial setting).

Figure 7.3.1 Servo ON→OFF (motor stops)

Main circuit AC power	L1, L2	Input	ON OFF	– –
Servo ready SRDY	O7	Output	ON OFF	C O
Servo ON SVON	I1	Input	ON OFF	C O
Internal alarm status	–	(Internal)	ERROR OK	– –
Motor excitation status	–	(Internal)	ON OFF	– –
Deceleation stop status	–	(Internal)	ON OFF	– –
Servo status	O2	Output	ON OFF	C O
Brake release MBRK	O1	Output	ON OFF	C O
Alarm status ALM	O8	Output	ON OFF	C O

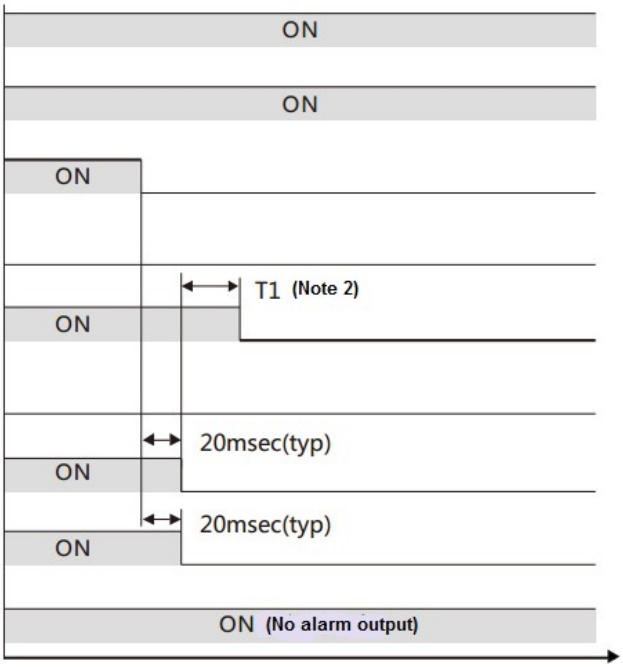

Note 1) About I/O status, “C” indicates the internal output circuit contact and external contact is close, while “O” means open.

Note 2) T1 can be set in parameter No.237.0 (initial setting 0msec, changeable range: 0 to 500msec).

7.3.2 Servo ON →OFF(motor rotates)

When servo OFF, the deceleration stop release condition is to reach the speed release, or after specified running time (Parameter No.224.0=1, preferences) but motor speed is above the servo OFF deceleration stop release speed r (Parameter No.227.0=50rpm, preferences).

Figure 7.3.2 Servo ON →OFF(motor rotates)

Main circuit AC power	L1, L2	Input	ON OFF	– –
Servo ready SRDY	O7	Output	ON OFF	C O
Servo ON SVON	I1	Input	ON OFF	C O
Internal alarm status	–	(Internal)	ERROR OK	– –
Motor excitation status	–	(Internal)	ON OFF	– –
Deceleration stop status	–	(Internal)	ON OFF	– –
Servo status SERVO	O2	Output	ON OFF	C O
Break release MBRK	O1	Output	ON OFF	C O
Alarm status ALM	O8	Output	ON OFF	C O
Motor speed	–	–	–	– 0rpm

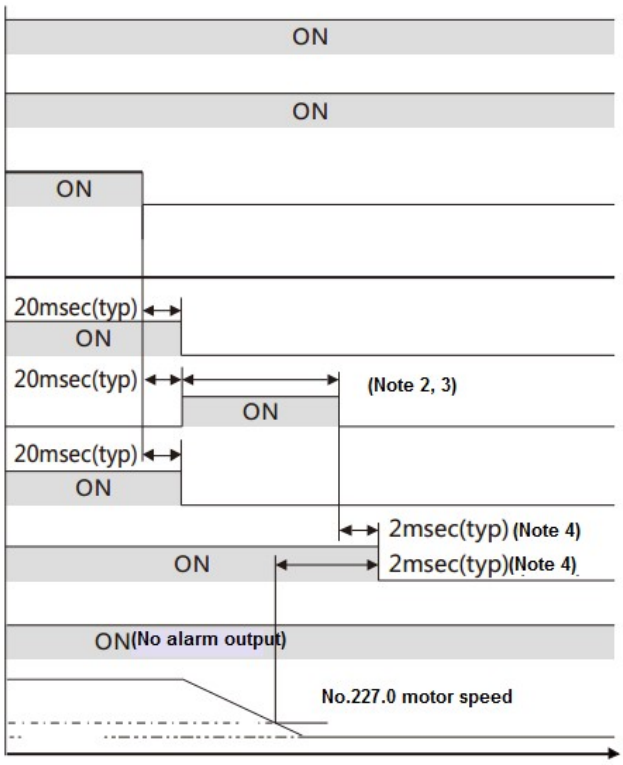

Note 1) About I/O status, “C” indicates the internal output circuit contact and external contact is close, while “O” means open.

Note 2) When servo OFF, it stops in the selected deceleration stop mode(Parameter No.224.0)..

Note 3) Immediate stop and short-circuit brake will finish when it meets the conditions of deceleration stop at servo OFF (ParameterNo.224.1, 226.0, 227.0)

Note 4) MBRK will be OFF when the deceleration stop has completed or the motor speed is to reach the setting value specified in parameter No.227.0. If deceleration stop mode is selected to the free-run (parameter No.224.0) at servo OFF, the MBRK will be OFF when motor excitation is OFF.

7.4 At occurrence of alarm

Figure 7.4.1 At occurrence of alarm

Main circuit AC power	L1, L2	Input	ON OFF	– –
Servo ready SRDY	O7	Output	ON OFF	C O
Servo ON SVON	I1	Input	ON OFF	C O
Internal alarm status	–	(Internal)	ERROR OK	– –
Motor excitation status	–	(Internal)	ON OFF	– –
Deceleration stop status	–	(Internal)	ON OFF	– –
Servo status SERVO	O2	Output	ON OFF	C O
Break release MBRK	O1	Output	ON OFF	C O
Alarm status ALM	O8	Output	ON OFF	C O
Motor speed	–	–	–	– 0rpm

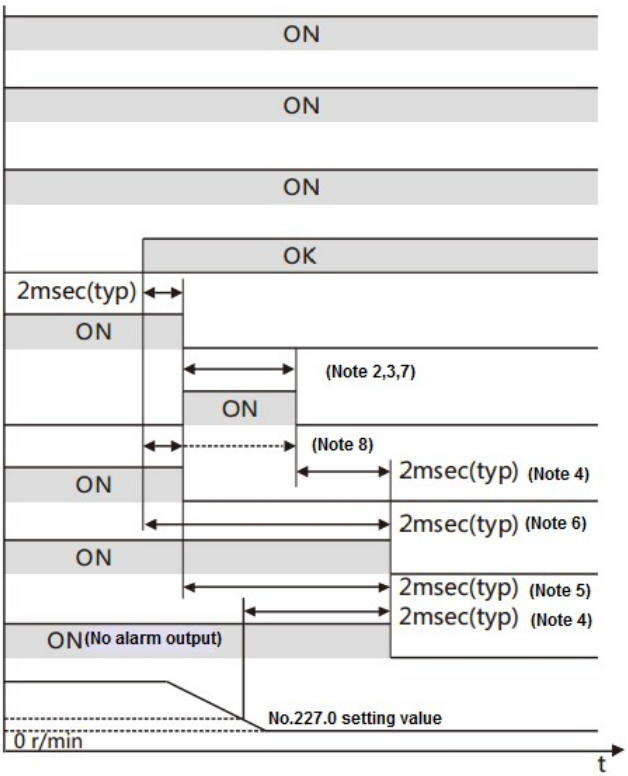

Note 1) About I/O status, “C” indicates the internal output circuit contact and external contact is close, while “O” means open.

Note 2) At servo OFF, via type selection, the deceleration stop (parameter No.224.0) will be:.

a) Prompt stop or short brake via short brake deceleration stop

b) Free run, free run stop

Note 3) Deceleration stop will finish when it meets the conditions of deceleration stop at servo OFF (parameter No.224.1, 226.0, 227.0) .

Note 4) MBRK will be OFF when the deceleration stop has completed or the motor speed is below the setting value specified in parameter No.227.0. (excluding the occurrence of the alarm in Note 6)

Note 5) The MBRK will be OFF when motor excitation is OFF, when the free run is selected in No.224.0.

Note 6) When the following alarms occur, MBRK will be OFF right after internal alarm state is ERROR ..

a) Encoder error

b) Undervoltage of control power supply

c) Inverter output error

Note 7) When the following alarms occur, the deceleration stop will be in the following ways.

a) If motor speed cannot be detected due to encoder error. It will be OFF at the operation time in No.226.0.

b) Selection of deceleration stop at the power supply voltage(No.224.2) drops. When selecting 0(=Disable), free-run stops. When selecting 1(=Enable), it will be OFF after the operation time (No.228.0) of power supply drop deceleration stop. As the CPU will stop immediately, the actual operation time will be shortened.

c) Free-run stops as the inverter output error(inverter error 1, overvoltage error, overcurrent error, base circuit break)..

Note 8) When the following alarms occur, SERVO signal can be delayed to deceleration stop OFF.

a) Encoder error

b) Undervoltage of control power supply

7.5 Alarm reset

7.5.1 Alarm reset (SVON=ON)

Figure 7.5.1 Alarm reset (SVON=ON)

Main circuit AC power	L1, L2	Input	ON OFF	– –
Servo ready SRDY	O7	Output	ON OFF	C O
Servo ON SVON	I1	Input	ON OFF	C O
Reset	I2	Input	ON OFF	C O
Internal alarm status	–	(Internal)	ERROR OK	– –
Motor excitation status	–	(Internal)	ON OFF	– –
Deceleration stop status	–	(Internal)	ON OFF	– –
Servo status SERVO	O2	Output	ON OFF	C O
Break release MBRK	O1	Output	ON OFF	C O
Alarm status ALM	O8	Output	ON OFF	C O
Motor speed	–	–	–	– 0rpm

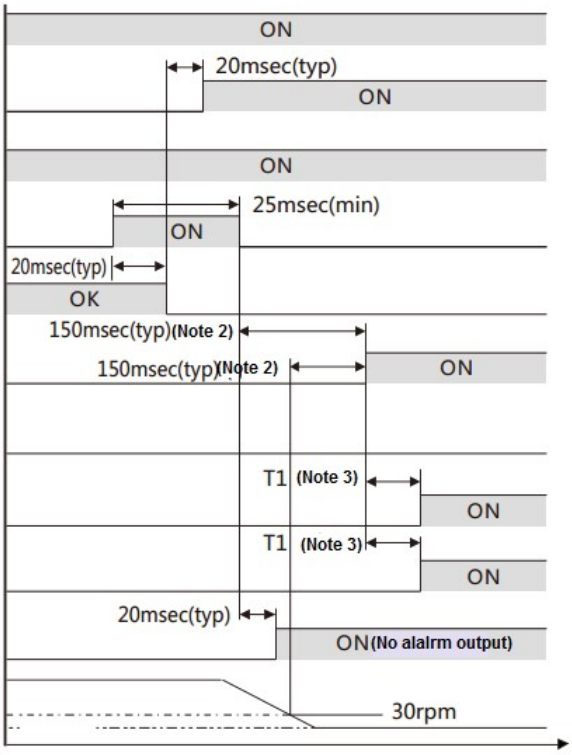

Note 1) About I/O status, “C” indicates the internal output circuit contact and external contact is close, while “O” means open.

Note 2) The servo can be not ON when motor speed is less than 30rpm.

Note 3) T1 can be set in parameter No.238.0.(Initial value 4msec, value range: 0 to 500msec)

7.5.2 Alarm reset (SVON=OFF)

Figure 7.5.2 Alarm reset (SVON=OFF)

Main circuit AC power	L1, L2	Input	ON OFF	– –
Servo ready SRDY	O7	Output	ON OFF	C O
Servo ON SVON	I1	Input	ON OFF	C O
Reset	I2	Input	ON OFF	C O
Internal alarm status	–	(Internal)	ERROR OK	– –
Motor excitation status	–	(Internal)	ON OFF	– –
Deceleration stop status	–	(Internal)	ON OFF	– –
Servo status SERVO	O2	Output	ON OFF	C O
Break release MBRK	O1	Output	ON OFF	C O
Alarm status ALM	O8	Output	ON OFF	C O

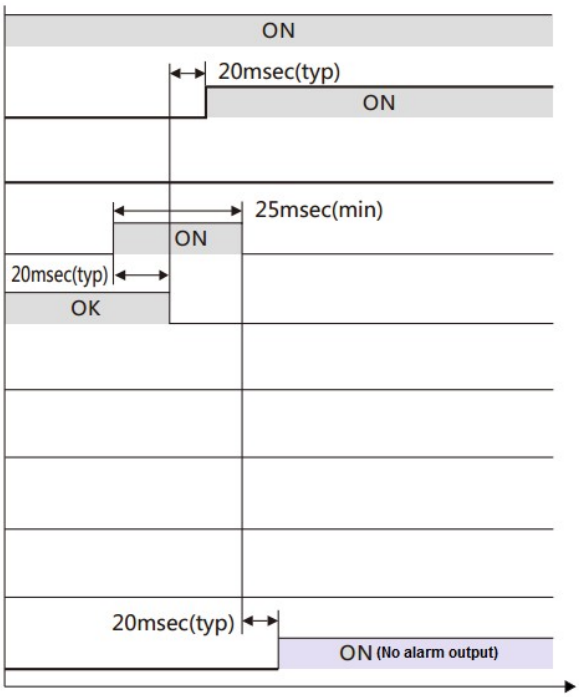

Note 1) About I/O status, “C” indicates the internal output circuit contact and external contact is close, while “O” means open.

8. Operation

8.1 Preface

8.1.1 Preface

This product can drive the motor by 5 operation modes of combination of control mode and command mode.

This chapter describes the operation method of different operation modes.

■ Position control mode (Pulse position command input)

1) Wiring for user I/O (CN1) connector

The following three kinds of signals can be input in position control mode.

- Differential input
- 24V open collector input
- 5V open collector input

2) The setting of basic parameter

3) Test run

■ Speed control mode(Analog speed command input)

1) Wiring for user I/O (CN1) connector

2) The setting of basic parameter

3) Test run

■ Speed control mode(Internal speed command)

1) Wiring for user I/O (CN1) connector

2) The setting of basic parameter

3) Test run

■ Torque control mode (Analog torque command input)

1) Wiring for user I/O (CN1) connector

2) The setting of basic parameter

3) Test run

■ Position control mode (Internal position command)

8.1.2 Precautions

Table 8.1.1 Precautions

!	Make sure to cut off all phases of power supply before wiring.	To .prevent electric shock, fire, malfunction and injury
!	The wiring should be performed by the professional electrical engineer.	To .prevent electric shock, fire, malfunction and injury
!	Make sure all the wiring should be connected properly before power ON.	To .prevent electric shock, fire, malfunction and injury

8.1.3 Common parameters

Point

The common parameters in the following table should be set in all the operation modes.

Set the following parameters according to the using status.

For details, refer to [Chapter 6 Parameter list].

Table 8.1.2 Common parameter list

Types	Names			No.	Reference
Common parameters	Control mode			2.0	
	Command mode			3.0	
	Operation mode			9.0	
	Torque command range	Switch		144.0	
		Value 1		147. 0	
		Value 2		148. 0	
	Torque limit output			144.1	
	Delay time for servo OFF			237. 0	
	Delay time for mechanical brake release			238. 0	
	Absolute system			257. 0	
	Encoder pulse output	Rotation direction		257.0	
		Division and multiplication	Numerator	276. 0	
			Denominator	278. 0	
RS-485 communication	Switch			8. 0	
	Address			4. 0	
	Communication speed rate			6. 0	
	Stop bit			6. 1	
	Parity			6. 2	
	Minimum response time			11. 0	
Fault detection	Position deviation	Switch		65. 0	
		Value		87. 0	

		Delay time	89. 0	
	Speed deviation	Switch	65. 1	
		Value	90. 0	
		Delay time	91. 0	
	Encoder pulse output	Frequency upper limit	285. 0	
		Delay time	286. 0	
	Instantaneous voltage-drop	Delay time	305. 0	
Drive restriction options	Setting		67. 0	
	Deceleration method		67. 1	
	Stop status		67. 2	
	Keep position deviation counter		67. 3	
Deceleration stop	Method		224. 0	
	Release condition		224. 1	
	Operation time		226. 0	
	Rotation cancellation		227. 0	
	Control power supply error	Switch	224. 2	
		Operation time	228. 0	
	Torque command range		151. 0	

8.1.4 Setting method for basic parameter

To drive the motor in the different operation modes, the setting and operation of the related basic parameter should be done necessarily. Here are the steps of parameter setting and change by using 'setting panel'.

■By setting panel

1. Switch on the power supply to the drive

2. Set the basic parameter according to the following steps.

Table 8.1.3 Change of the basic parameter (By setting panel)

Display and operation	**Description**
	Initial display at the start.
Press MODE button four times	Switch to the mode of setting panel.
	Switch to the parameter mode. You can change the parameter No. here. (Display parameter 2.0)
Press SET button once	Display the setting value of parameter 2.0.
	Display the setting value of parameter 2.0. The flickering bit is changeable.
Press ▲, ▼ button	Press the UP or DOWN to input the parameters.
	Confirm the parameter value. (Display in 'Speed control mode'.)
Press SET button once	After setting the parameter on the RAM of the drive, the display changes from flickering to light.
Press MODE button once	Return to the display of parameter No.

P002.0r	Return to the display to change the parameter No. (Display parameter 2.0)
Press ▲ button	Press UP button to change the parameter No.
P003.0r	Display parameter 3.0.
Press SET button once	Display the setting value of parameter 3.0.
Press ▲, ▼ button to set the related parameters. We can go to the next step after all the parameters are set.	
Press MODE three times	Switch to the mode of setting panel.
SAUE_P	Switch to parameter saving mode.
Press SET button once	Save the parameter to the EEPROM in drive. (When saving, 『P』 in 『SAVE_P』 will flicker.)
Nr_End	To the end.
-	Please cut off the power supply to the drive and restart. After restart the power, the setting will be effective.

Note 1: The control power for models of 750W or less is supplied from external 24VDC.For 1kW or more, is supplied from internal. Therefore, the control power for models of 1kW or more can be ON/OFF by switching on/off the AC power supply of main circuit.

8.2 Position control mode (Pulse position command input)

8.2.1 Wiring for user I/O connector (CN1) (Differential input)

Name	Symbol	Terminal No.	Signal name	Contents
User I/O ●24V power supply input ●Parallel I/O ●Pulse command input ●ABZ output	CN1	1	24V	Drive control power supply 24V input
		2	G24V	Drive control power supply GND
		3	COM+/-	I/O power supply 24V input
		4	SVON	Servo ON input
		5	RESET	Alarm reset input
		6	HOLD	Command input restriction
		7	PCLR	Deviation counter clear input
		8	-	Reserved
		9	CCWL	CCW drive input restriction
		10	CWL	CW drive input restriction
		11	TLSEL1	Torque limit input
		12	COM-	I/O power supply GND
		13	MBRK	Brake release output
		14	SERVO	Servo status output
		15	POSIN	Position completion output

		16	-	Reserved
		17	T-LIMIT	Torque limit output
		18	OCZ	Encoder Z-phase output (open collector)
		19	SRDY+	Servo ready output +
		20	SRDY-	Servo ready output -
		21	ALM+	Servo alarm output+
		22	ALM-	Servo alarm output-
		23	NC1	Reserved (Disconnected)
		24	-	Reserved
		25	-	Reserved
		26	CMD_PLS	Pulse command, pulse, orthogonal phase difference A-phase, CCW
		27	/CMD_PLS	Pulse command, /pulse, orthogonal phase difference /A-phase, /CCW
		28	-	Reserved
		29	-	Reserved
		30	CMD_DIR	Pulse command, direction, orthogonal phase difference B-phase, CW
		31	/CMD_DIR	Pulse command, /direction, orthogonal phase difference /B-phase, /CW
		32	-	Reserved
		33	-	Reserved
		34	-	Reserved
		35	-	Reserved
		36	OUT_A	Encoder A phase output
		37	/OUT_A	Encoder /A phase output
		38	OUT_B	Encoder B phase output
		39	/OUT_B	Encoder /B phase output
		40	OUT_Z	Encoder Z phase output
		41	/OUT_Z	Encoder /Z phase output
		42	SG	Signal ground
		43	485	RS-485 communication data
		44	/485	RS-485 communication /data
		45	SG	Signal ground
		46	NC2	Reserved(Disconnected)
		47	-	Reserved
		48	-	Reserved

		49	-	Reserved
		50	-	Reserved

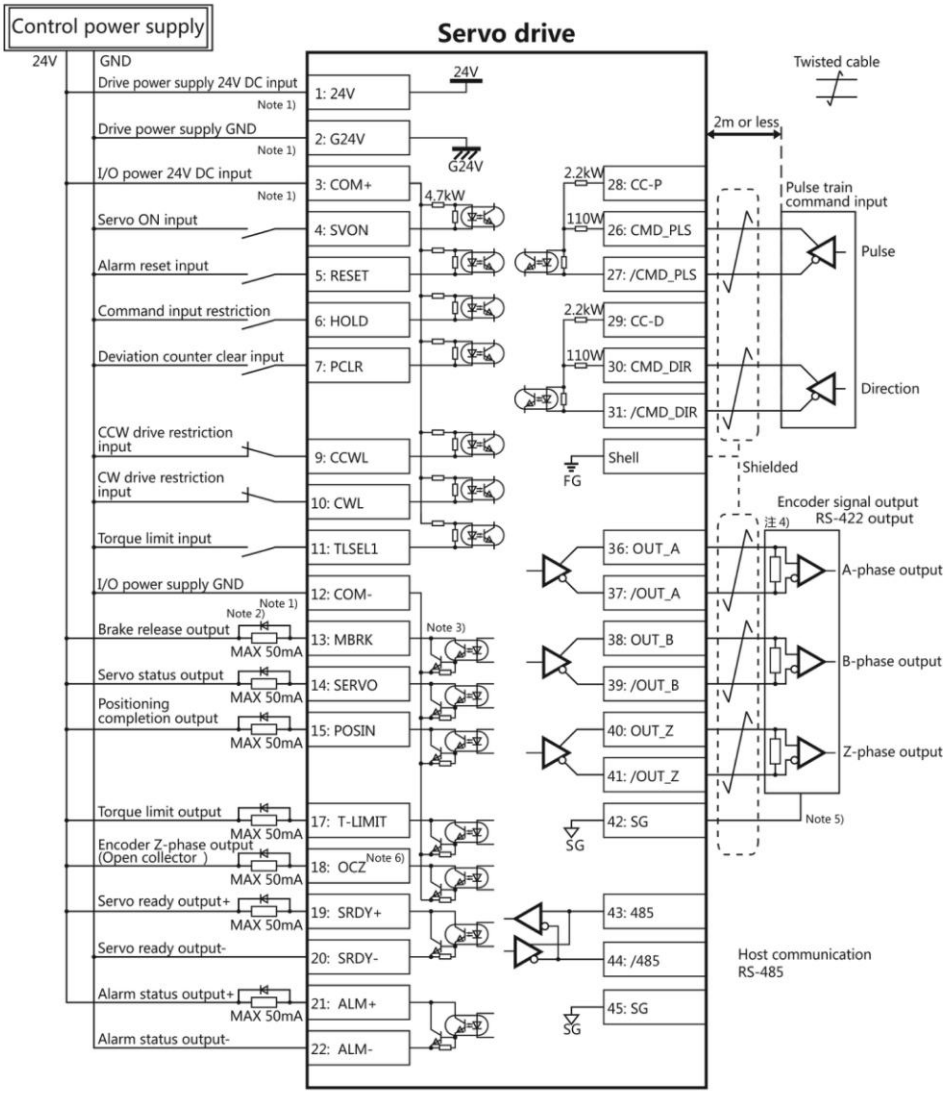

Note 1) Control power supply(24V, G24V) and I/O power (COM+, COM-) share the same power supply(For the models of 750W or less).

Note 2) If there is drive inductive load(relay), please use protective circuits(diode).

Note 3) Transistor output is an open collector output circuit of the Darlington-connected. It should be connected with relay or optocoupler. Please don’ t connect transistor directly because the voltage VCE(SAT) between collector and emitter is about 1V which cannot meet the required voltage VIL of TTL IC when transistor is ON.

Note 4) Terminal resistance must be connected as shown in the wiring diagram.

Note 5) Connect the signal ground on the host control device of output signal of the encoder. The connection of signal ground and power supply GND may cause malfunction.

Note 6) If the pulse width of Z-phase is too narrow to identify the host control device, please reduce the encoder pulse output

division and multiplication No.276.0, 278.0 or reduce the speed to increase the pulse width.[Pulse width]=1/speed/(division and multiplication×2^{17}).

8.2.2 Pulse position command input (24V open collector input)

Name	Symbol	Terminal No.	Signal name	Contents
User I/O ●24V power supply input ●Parallel I/O ●Pulse command input ●ABZ output	CN1	1	24V	Drive control power supply 24V input
		2	G24V	Drive control power supply GND
		3	COM+/-	I/O power supply 24V input
		4	SVON	Servo ON input
		5	RESET	Alarm reset input
		6	HOLD	Command input restriction
		7	PCLR	Deviation counter clear input
		8	-	Reserved
		9	CCWL	CCW drive input restriction
		10	CWL	CW drive input restriction
		11	TLSEL1	Torque limit input
		12	COM-	I/O power supply GND
		13	MBRK	Brake release output
		14	SERVO	Servo status output
		15	POSIN	Position completion output
		16	-	Reserved
		17	T-LIMIT	Torque limit output
		18	OCZ	Encoder Z-phase output (open collector)
		19	SRDY+	Servo ready output +
		20	SRDY-	Servo ready output -
		21	ALM+	Servo alarm output+
		22	ALM-	Servo alarm output-
		23	NC1	Reserved (Disconnected)
		24	-	Reserved
		25	-	Reserved
		26	CMD_PLS	Reserved
		27	/CMD_PLS	Pulse command, pulse, orthogonal phase difference A-phase, CCW
		28	CC-P	24V for pulse command PSL
		29	CC-D	24V for pulse command DIR
		30	CMD_DIR	Reserved
		31	/CMD_DIR	Pulse command, direction, orthogonal phase difference B-phase, CW

		32	-	Reserved
		33	-	Reserved
		34	-	Reserved
		35	-	Reserved
		36	OUT_A	Encoder A phase output
		37	/OUT_A	Encoder /A phase output
		38	OUT_B	Encoder B phase output
		39	/OUT_B	Encoder /B phase output
		40	OUT_Z	Encoder Z phase output
		41	/OUT_Z	Encoder /Z phase output
		42	SG	Signal ground
		43	485	RS-485 communication data
		44	/485	RS-485 communication /data
		45	SG	Signal ground
		46	NC2	Reserved(Disconnected)
		47	-	Reserved
		48	-	Reserved
		49	-	Reserved
		50	-	Reserved

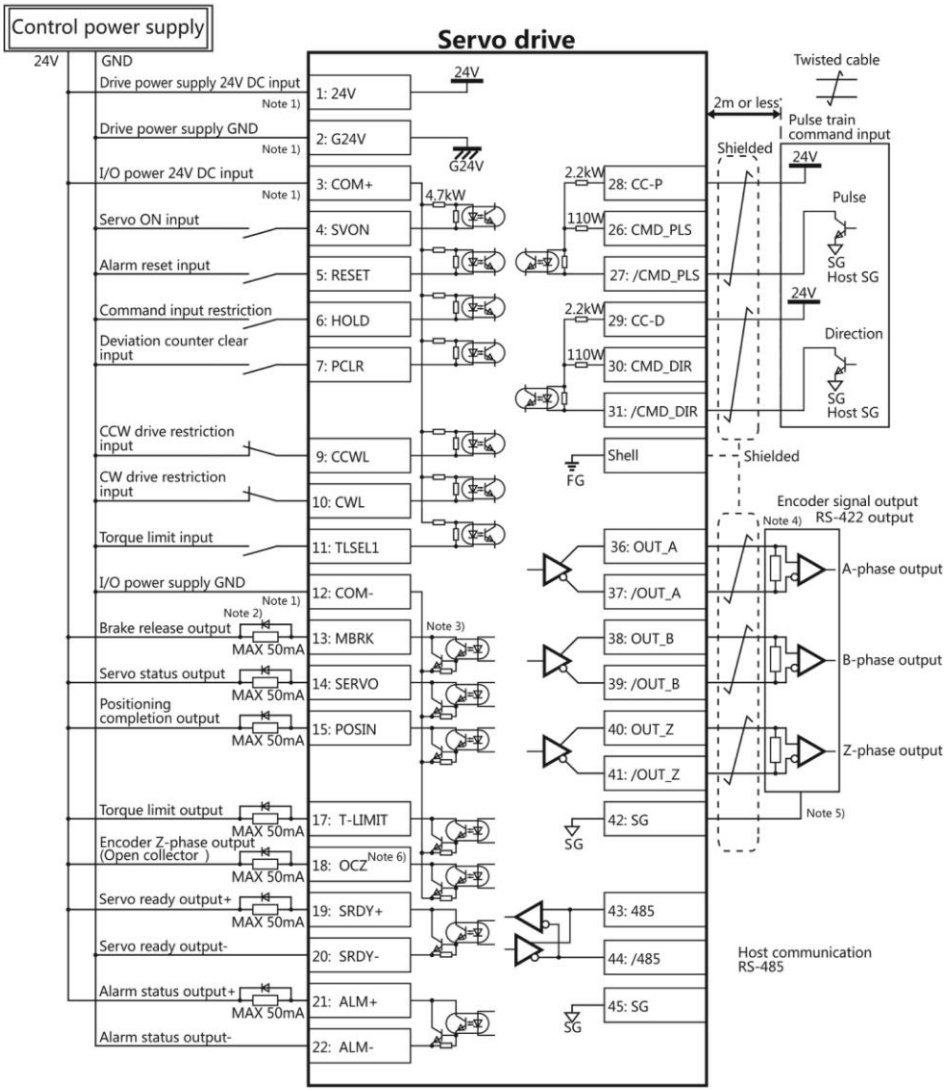

Note 1) Control power supply(24V, G24V) and I/O power (COM+, COM-) share the same power supply(For the models of 750W or less).

Note 2) If there is drive inductive load(relay), please use protective circuits(diode).

Note 3) Transistor output is an open collector output circuit of the Darlington-connected. It should be connected with relay or optocoupler. Please don’ t connect transistor directly because the voltage VCE(SAT) between collector and emitter is about 1V which cannot meet the required voltage VIL of TTL IC when transistor is ON.

Note 4) Terminal resistance must be connected as shown in the wiring diagram.

Note 5) Connect the signal ground on the host control device of output signal of the encoder. The connection of signal ground and power supply GND may cause malfunction.

Note 6) If the pulse width of Z-phase is too narrow to identify the host control device, please reduce the encoder pulse output division and multiplication No.276.0, 278.0 or reduce the speed to increase the pulse width.[Pulse width]=1/speed/(division and multiplication×2^{17}).

8.2.3 Pulse position command input (5V open collector input)

Name	Symbol	Terminal No.	Signal name	Contents
User I/O ●24V power supply input ●Parallel I/O ●Pulse command input ●ABZ output	CN1	1	24V	Drive control power supply 24V input
		2	G24V	Drive control power supply GND
		3	COM+/-	I/O power supply 24V input
		4	SVON	Servo ON input
		5	RESET	Alarm reset input
		6	HOLD	Command input restriction
		7	PCLR	Deviation counter clear input
		8	-	Reserved
		9	CCWL	CCW drive input restriction
		10	CWL	CW drive input restriction
		11	TLSEL1	Torque limit input
		12	COM-	I/O power supply GND
		13	MBRK	Brake release output
		14	SERVO	Servo status output
		15	POSIN	Position completion output
		16	-	Reserved
		17	T-LIMIT	Torque limit output
		18	OCZ	Encoder Z-phase output (open collector)
		19	SRDY+	Servo ready output +
		20	SRDY-	Servo ready output -
		21	ALM+	Servo alarm output+
		22	ALM-	Servo alarm output-
		23	NC1	Reserved (Disconnected)
		24	-	Reserved
		25	-	Reserved
		26	CMD_PLS	5V for pulse command PLS
		27	/CMD_PLS	Pulse command, pulse, orthogonal phase difference A-phase, CCW
		28	CC-P	Reserved
		29	CC-D	Reserved
		30	CMD_DIR	5V for pulse command DIR
		31	/CMD_DIR	Pulse command, direction, orthogonal phase difference B-phase, CW
		32	-	Reserved
		33	-	Reserved

		34	-	Reserved
		35	-	Reserved
		36	OUT_A	Encoder A phase output
		37	/OUT_A	Encoder /A phase output
		38	OUT_B	Encoder B phase output
		39	/OUT_B	Encoder /B phase output
		40	OUT_Z	Encoder Z phase output
		41	/OUT_Z	Encoder /Z phase output
		42	SG	Signal ground
		43	485	RS-485 communication data
		44	/485	RS-485 communication /data
		45	SG	Signal ground
		46	NC2	Reserved(Disconnected)
		47	-	Reserved
		48	-	Reserved
		49	CC-P(5V)	5V for pulse command PLS (Built in current limiting resistor)
		50	CC-D(5V)	5V for pulse command DIR (Built in current limiting resistor)

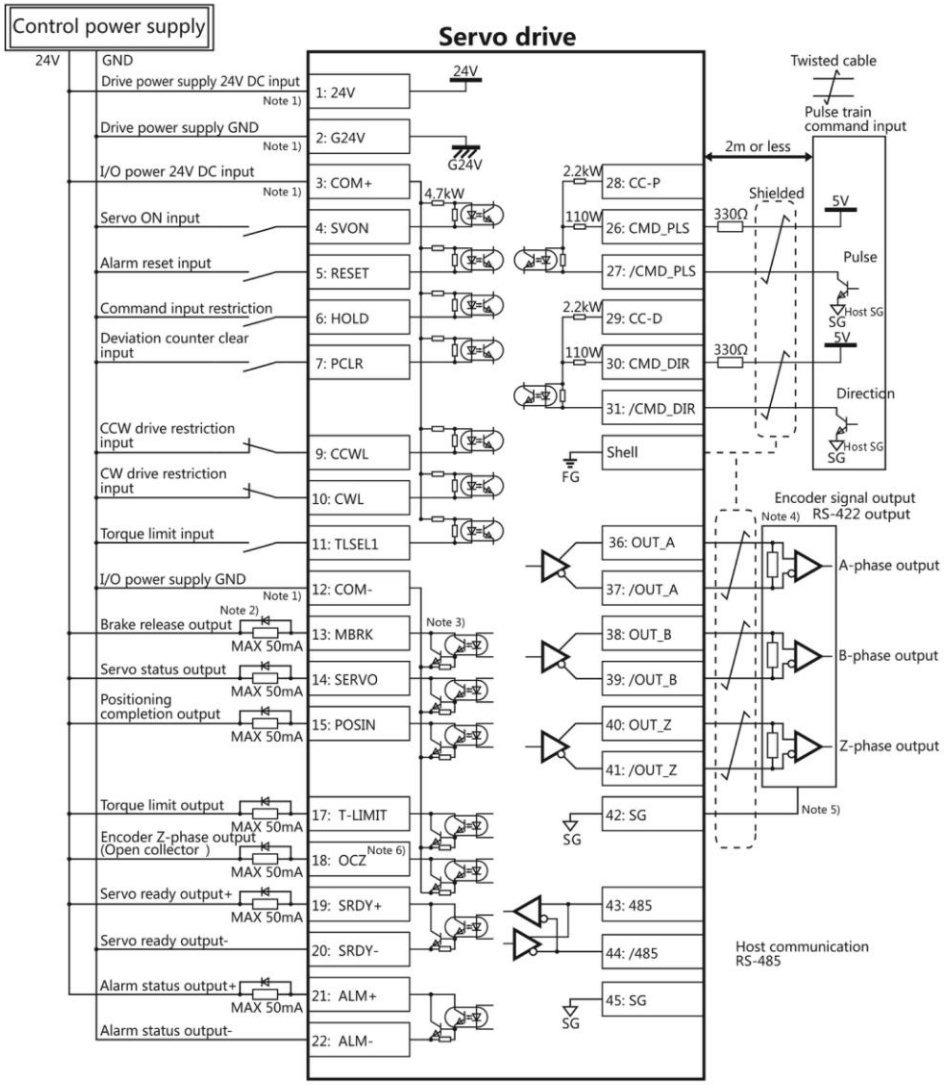

Note 1) Control power supply(24V, G24V) and I/O power (COM+, COM-) share the same power supply(For the models of 750W or less).

Note 2) If there is drive inductive load(relay), please use protective circuits(diode).

Note 3) Transistor output is an open collector output circuit of the Darlington-connected. It should be connected with relay or optocoupler. Please don’ t connect transistor directly because the voltage VCE(SAT) between collector and emitter is about 1V which cannot meet the required voltage VIL of TTL IC when transistor is ON.

Note 4) Terminal resistance must be connected as shown in the wiring diagram.

Note 5) Connect the signal ground on the host control device of output signal of the encoder. The connection of signal ground and power supply GND may cause malfunction.

Note 6) If the pulse width of Z-phase is too narrow to identify the host control device, please reduce the encoder pulse output division and multiplication No.276.0, 278.0 or reduce the speed to increase the pulse width.[Pulse width]=1/speed/(division and multiplication×2^{17}).

8.2.4 Setting of basic parameter (Pulse position command input)

The factory setting is 「Pulse position command input」. It is necessary to set the following parameters if the drive is driven by pulse position command input.

Table 8.2.4 Parameter of control mode (Pulse position command input)

Parameter No.	Parameter	Operation • Value
2.0	Control mode selection	Set to “0”.
3.0	Command mode selection	Set to “1”.
32.0	Pulse command input mode	Select one in the following (Note 1) “0”: Pulse / direction “1”: Orthogonal phase difference “2” : CCW/CW
34.0	Command division and multiplication (Numerator)	Set to “32768”(Note 2)
36.0	Command division and multiplication (Denominator)	Set to “(The number of output pulse of host control mode)/4” (Note 2)

Note 1: Pulse command input list is shown in the following table.

Table 8.2.5 Pulse command input list

Parameter No.32.0 pulse command input mode	Input signal	Signal name	The minimum necessary time range (t1, t2, t3, t4, t5, t6)	
			Positive direction	Negative direction
0 (Initial value)	Pulse • direction Command pulse	Pulse CMD_PLS Direction CMD_DIR	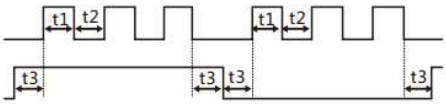	
1	AB-phase orthogonal phase pulse	A-phase CMD_PLS B-phase CMD-DIR	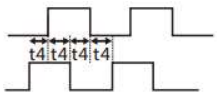	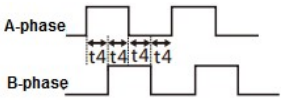
2	Positive direction pulse Negative direction pulse	CCW CMD-PLS CW CMD-DIR	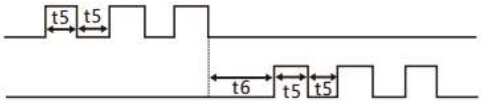	

Note 2: Set when 1-rotation pulse (131,072) of host control device and drive is different. For details, refer to 「Chapter 4 Parameter list」.

Set the following parameters according to the using status.

Table 8.2.6 Parameter for pulse train position command input

Parameter No.	Parameter	Description
32.1	Pulse train command input Rotation direction	For details, refer to 8.2.7.
32.3	Selection of Pulse train input logic	Select the logic of pulse train
33.0	Pulse train command - Input filter selection	Reduce the misoperation caused by input command pulse interference.
64.0	Positioning completion determination method	Specify the conditions of positioning completion.
68.0	Positioning completion range	

69.0	Positioning completion speed	
70.0	Positioning completion Pulse train command input (speed)	
71.0	Positioning completion Detection delay time	
66.0	Position command smoothing filter 1 selection	Set the damping filter. Suppress the resonance of device when the acceleration/ deceleration command is too high or positioning.
66.1	Position command smoothing filter 2 selection	
80.0	Position command smoothing filter 1 Moving average order	
81.0	Position command smoothing filter 2 Moving average order	

Table 8.2.7 The setting of parameter 32.1 and the rotation direction of motor (Pulse train position command input)

Value of parameter 32.1	**Command pulse of host control device**	
	Positive direction	**Negative direction**
0		
1 [Initial value]		

The basic parameter and operation parameter can be set by the [Set panel].

8.2.5 Test run (Pulse train position command input)

■Before test run

Table 8.2.8

!	Make sure all the wiring are connected properly before switch on the power to the drive and motor.	To prevent electric shock, fire, malfunction and injury.
!	Test run after setting the basic parameters.	If set the wrong basic parameters, the motor will not run, run unsteadily or lose control, which may cause some injury or accidents.
!	Confirm the operation of the motor alone first before test run. (Remove the other connection to the mechanics.)	The unexpected movements, such as unstable action or lose control, may cause tome injury or accidents.
!	Drive the motor after release the brake on the motor if the motor is attached with the brake.	If not, it may cause the malfunction to the brake and motor.

■Test run

Table 8.2.9 Steps for test run (Pulse train position command input)

Steps	**Operation**
1	Make sure all the wiring are connected properly.
2	Switch on the power to the drive. Note 1)
3	Switch on the main circuit power to the drive(200V AC).
4	Make the SVON input of drive ON to start the motor excitation. (Connect the I 1 terminal to the COM-)
5	Input position command pulse at a relatively low speed from host control device to make the motor run at

	a low speed(100r/min). Make sure the rotation direction of the motor is same to the setting direction.
6	Improve the position command pulse frequency gradually after confirming the safe implementation of actual operation. Then confirm the operation until it comes to the specified speed.

Note1: The control power supply for the models of 750W or less are supplied by external 24V DC. 1kW or more are supplied from internal. So the control power supply of models of 1kW or more can be ON or OFF by switching on or cutting off the main circuit AC power.

8.3 Speed control mode (Analog speed command input)

8.3.1 Wiring for user I/O connector(CN1) (Analog speed command input)

Name	Symbol	Pin No.	Signal name	Contents
User I/O ●24V power supply input ●Parallel I/O ●Pulse command input ●ABZ output	CN1	1	24V	Drive control power supply 24V input
		2	G24V	Drive control power supply GND
		3	COM+	I/O power supply 24V input
		4	SVON	Servo ON input
		5	RESET	Alarm reset input
		6	HOLD	Command input restriction(Zero speed clamp)
		7	-	Reserved
		8	-	Reserved
		9	CCWL	CCW drive input restriction
		10	CWL	CW drive input restriction
		11	TLSEL1	Torque limit input
		12	COM-	I/O power supply GND
		13	MBRK	Brake release output
		14	SERVO	Servo status output
		15	-	Reserved
		16	-	Reserved
		17	T-LIMIT	Torque limit output
		18	OCZ	Encoder Z-phase output (open collector)
		19	SRDY+	Servo ready output +
		20	SRDY-	Servo ready output -
		21	ALM+	Servo alarm output+
		22	ALM-	Servo alarm output-
		23	NC1	Reserved (Disconnected)
		24	-	Reserved
		25	-	Reserved
		26	-	Reserved
		27	-	Reserved

		28	-	Reserved
		29	-	Reserved
		30	-	Reserved
		31	-	Reserved
		32	A SPEED	Analog speed command input
		33	A_GND	Analog speed command input ground
		34	-	Reserved
		35	-	Reserved
		36	OUT_A	Encoder A phase output
		37	/OUT_A	Encoder /A phase output
		38	OUT_B	Encoder B phase output
		39	/OUT_B	Encoder /B phase output
		40	OUT_Z	Encoder Z phase output
		41	/OUT_Z	Encoder /Z phase output
		42	SG	Signal ground
		43	485	EIA-485 communication data
		44	/485	EIA-485 communication /data
		45	SG	Signal ground
		46	NC2	Reserved(Disconnected)
		47	-	Reserved
		48	-	Reserved
		49	-	Reserved
		50	-	Reserved

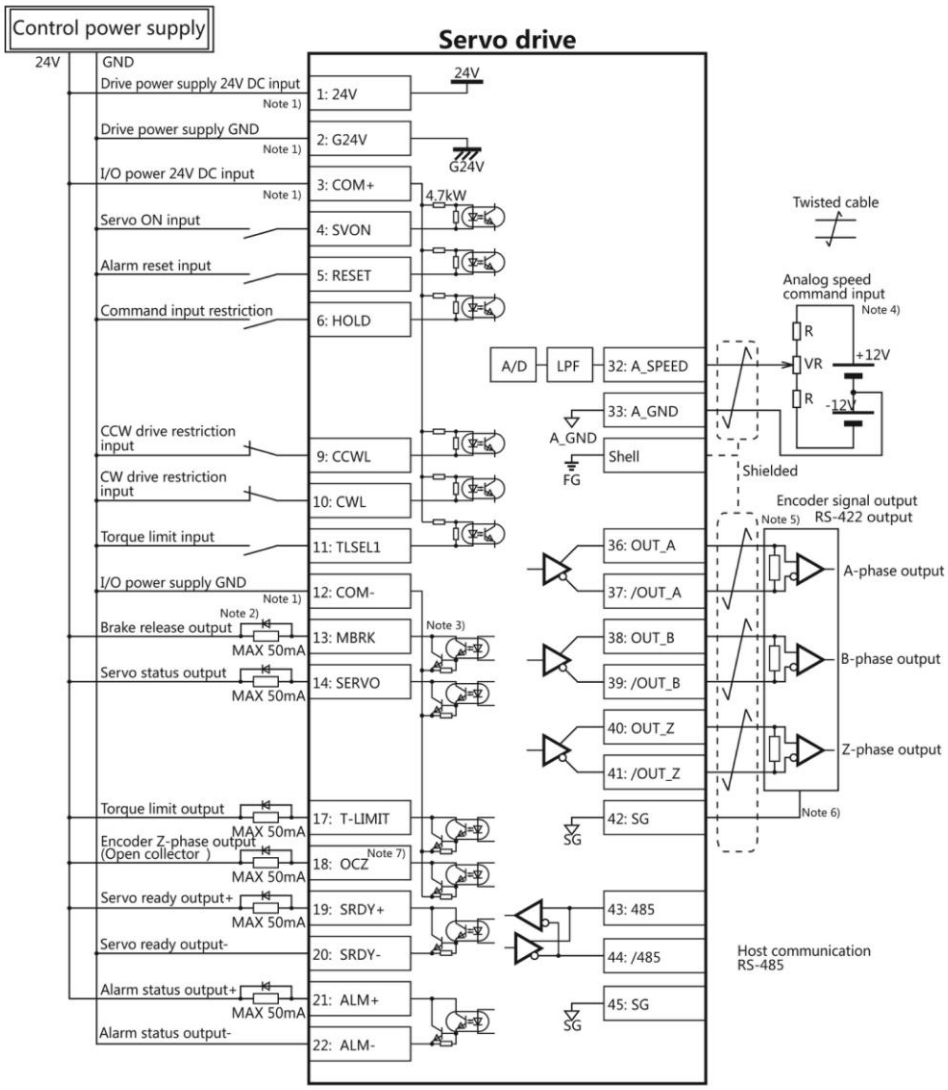

Note 1) Control power supply(24V, G24V) and I/O power (COM+, COM-) share the same power supply(For the models of 750W or less).

Note 2) If there is drive inductive load(relay), please use protective circuits(diode).

Note 3) Transistor output is an open collector output circuit of the Darlington-connected. It should be connected with relay or optocoupler. Please don’t connect transistor directly because the voltage VCE(SAT) between collector and emitter is about 1V which cannot meet the required voltage VIL of TTL IC when transistor is ON.

Note 4) Terminal resistance must be connected as shown in the wiring diagram.

Note 5) Terminal resistance must be connected as shown in the wiring diagram.

Note 6) Connect the signal ground on the host control device of output signal of the encoder. The connection of signal ground and power supply GND may cause malfunction.

Note 7) If the pulse width of Z-phase is too narrow to identify the host control device, please reduce the encoder pulse output division and multiplication No.276.0, 278.0 or reduce the speed to increase the pulse width.[Pulse width]=1/speed/(division and multiplication×2^{17})

8.3.2 Setting of basic parameters (Analog speed command input)

Set the basic parameters.

The following parameters must be set if the drive needs to be driven by analog speed command input.

Table 8.3.2 Parameter of control mode change(Analog speed command input)

Parameter No.	Parameter	Description
2.0	Select control mode.	Set to “1”.
3.0	Select command mode.	Set to “2”.

The parameters from [48. 0] to [78. 0] in the following table can be selected according to the actual usage.

Table 8.3.3 Parameter of analog speed command input

Parameter No.	Parameter	Description
48.0	Analog speed command input -Filter constant（Numerator）	Filter out the input command voltage interference. Use it with parameter 62.1.
49.0	Analog speed command input -Filter constant（Denominator）	
50.0	Analog speed command input -Gain (Numerator)	Set the speed at the maximum command input voltage (±10V). (Note 1)
51.0	Analog speed command input -Gain (Denominator)	
52.0	Analog speed command CCW speed limit override value (Numerator)	Set speed limit value at CCW rotation.(Note 2)
53.0	Analog speed command CCW speed limit override value (Denominator)	
54.0	Analog speed command CW speed limit override value (Numerator)	Set speed limit value at CW rotation.(Note 2)
55.0	Analog speed command CW speed limit override value (Denominator)	
60.0	Analog speed command - Fixed offset value	The motor speed is 0[r/mi n] by adjusting the command input to 0V. Use it with parameter 62.2.
62.0	Analog speed command - Rotational direction	For details, refer to table 5.3.4.
62.1	Analog speed command - Selection of input filter	Please use it with parameter 48.0 , 49.0.
62.2	Analog speed command - Selection of offset tuning method	Please use it with parameter 60.0.
77.0	Speed command smoothing filter selection	Please use it with parameter 78.0.
78.0	Moving average time for Speed command smoothing filter	Use it when the speed of motor is not stable. And use it with parameter 77.0.

Note 1: Set the maximum speed for the motor in parameter 51.0(Denominator). Set the expected maximum speed in parameter 50.0(Numerator).

Example) Make the following settings if the motor with the maximum speed of 5000 [r /mi n] needs to set to 3000 [r /mi n] at the maximum command input voltage (±10V).

Table 8.3.4 Analog speed command input Gain settings

Parameter No.	Parameter	Setting value
50.0	Analog speed command input -Gain (Numerator)	“3000”
51.0	Analog speed command input -Gain (Denominator)	“5000”

Note 2: Set the maximum speed for the motor in parameter 53.0, 55.0(Denominator). Set the expected speed limit value in parameter 52.0, 54.0(Numerator).

Example) Make the following settings if the motor with the maximum speed of 5000 [r /mi n] needs to set to the maximum speed limit value of 3000 [r /mi n].

Table 8.3.5 Analog speed command Speed limit value settings

Rotation direction	Parameter No.	Parameter	Setting value
CCW	52.0	Analog speed command CCW speed limit value(Numerator)	“3000”
	53.0	Analog speed command CCW speed limit value(Denominator)	“5000”
CW	54.0	Analog speed command CW speed limit value(Numerator)	“3000”
	55.0	Analog speed command CW speed limit value(Denominator)	“5000”

Table 8.3.6 Parameter 62.0 settings and rotation direction of the motor (Analog speed command input)

Value of parameter 62.0	Input analog command	
	Positive voltage	Negative voltage
0		
1 [Initial value]		

8.3.3 Test run (Analog speed command input)

■Before test run

Table 8.3.7

!	Make sure all the wiring are connected properly before switch on the power to the drive and motor.	To prevent electric shock, fire, malfunction and injury.
!	Test run after setting the basic parameters.	If set the wrong basic parameters, the motor will not run, run unsteadily or lose control, which may cause some injury or accidents.
!	Confirm the operation of the motor alone first before test run. (Remove the other connection to the mechanics.)	The unexpected movements, such as unstable action or lose control, may cause tome injury or accidents.
!	Drive the motor after release the brake on the motor if the motor is attached with the brake.	If not, it may cause the malfunction to the brake and motor.

■Test run

Table 8.3.8 Steps for test run (Analog speed command input)

Steps	Operation
1	Make sure all the wiring are connected properly.
2	Switch on the power to the drive. Note 1)
3	Switch on the main circuit power to the drive(200V AC).
4	Connect SVON terminal of CN1 connector to COM- to make the servo ON.
5	Input the analog speed command voltage at a low voltage to make the motor run at a low speed.
6	Improve the position command pulse frequency gradually after confirming the safe implementation of

	actual operation. Then confirm the operation until it comes to the specified speed.

Note1: The control power supply for the models of 750W or less are supplied by external 24V DC. 1kW or more are supplied from internal. So the control power supply of models of 1kW or more can be ON or OFF by switching on or cutting off the main circuit AC power.

8.4 Speed control mode (Internal speed command)

8.4.1 Wiring for user I/O connector(CN1) (Internal speed command)

Name	Symbol	Pin No.	Signal name	Contents
User I/O ●24V power supply input ●Parallel I/O ●Pulse command input ●Analog input ●ABZ output	CN1	1	24V	Drive control power supply 24V input
		2	G24V	Drive control power supply GND
		3	COM+	I/O power supply 24V input
		4	SVON	Servo ON input
		5	RESET	Alarm reset input
		6	VCRUN1	Input internal speed command-start 1(CCW ON)
		7	VCRUN2	Input internal speed command-start 1(CW ON)
		8	VCSEL1	Input internal speed command-Speed command selection 1
		9	VCSEL2	Input internal speed command-Speed command selection 2
		10	VCSEL3	Input internal speed command-Speed command selection 3
		11	TLSEL1	Torque limit input
		12	COM-	I/O power supply GND
		13	MBRK	Brake release output
		14	SERVO	Servo status output
		15	-	Reserved
		16	-	Reserved
		17	T-LIMIT	Torque limit output
		18	OCZ	Encoder Z-phase output (open collector)
		19	SRDY+	Servo ready output +
		20	SRDY-	Servo ready output -
		21	ALM+	Servo alarm output+
		22	ALM-	Servo alarm output-
		23	NC1	Reserved (Disconnected)
		24	-	Reserved
		25	-	Reserved
		26	-	Reserved

		27	-	Reserved
		28	-	Reserved
		29	-	Reserved
		30	-	Reserved
		31	-	Reserved
		32	-	Reserved
		33	-	Reserved
		34	-	Reserved
		35	-	Reserved
		36	OUT_A	Encoder A phase output
		37	/OUT_A	Encoder /A phase output
		38	OUT_B	Encoder B phase output
		39	/OUT_B	Encoder /B phase output
		40	OUT_Z	Encoder Z phase output
		41	/OUT_Z	Encoder /Z phase output
		42	SG	Signal ground
		43	485	EIA-485 communication data
		44	/485	EIA-485 communication /data
		45	SG	Signal ground
		46	NC2	Reserved(Disconnected)
		47	-	Reserved
		48	-	Reserved
		49	-	Reserved
		50	-	Reserved

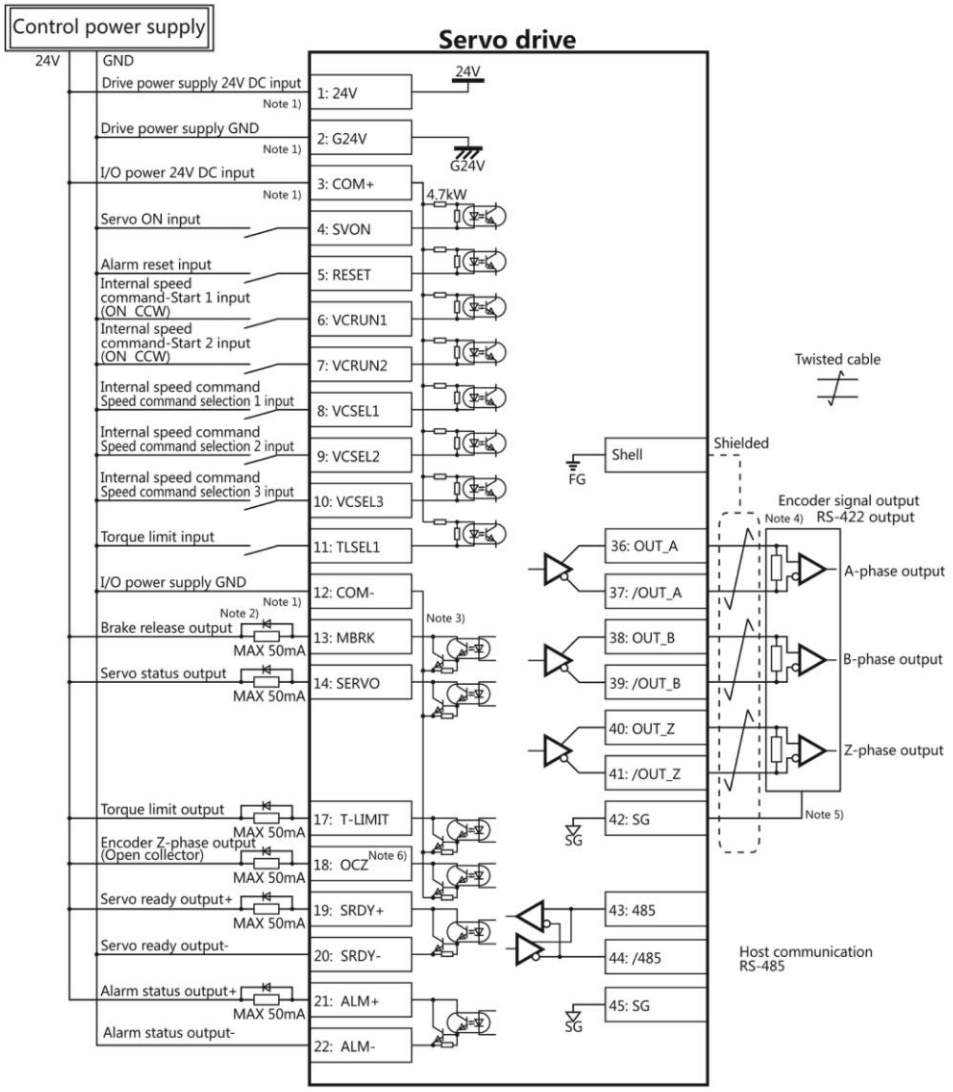

Note 1) Control power supply(24V, G24V) and I/O power (COM+, COM-) share the same power supply(For the models of 750W or less).

Note 2) If there is drive inductive load(relay), please use protective circuits(diode).

Note 3) Transistor output is an open collector output circuit of the Darlington-connected. It should be connected with relay or optocoupler. Please don't connect transistor directly because the voltage VCE(SAT) between collector and emitter is about 1V which cannot meet the required voltage VIL of TTL IC when transistor is ON.

Note 4) Terminal resistance must be connected as shown in the wiring diagram.

Note 5) Connect the signal ground on the host control device of output signal of the encoder. The connection of signal ground and power supply GND may cause malfunction.

Note 6) If the pulse width of Z-phase is too narrow to identify the host control device, please reduce the encoder pulse output division and multiplication No.276.0, 278.0 or reduce the speed to increase the pulse width.[Pulse width]=1/speed/(division and multiplication×2^{17})

8.4.2 Setting of basic parameters (Internal speed command)

Set the basic parameters.

The following parameters must be set if the drive needs to be driven by internal speed command.

Table 8.4.2 Parameters of control mode change (Internal speed command)

Parameter No.	Parameter	Description
2.0	Select control mode	Set to “1”.
3.0	Select command mode	Set to “3”.
388.0	Type of internal speed command	Set to “1”.

Table 8.4.3 Speed parameter of internal speed command

Parameter No.	Parameter	Description
390.0	Acceleration time (Note 1)	Initial value: 1000 [ms]
391.0	Deceleration time (Note 2)	Initial value: 1000 [ms]
392.0	Target speed 1	Initial value: 500 [r/mi n]
393.0	Target speed 2	Initial value: 1000 [r/mi n]
394.0	Target speed 3	Initial value: 1500 [r/mi n]
395.0	Target speed 4	Initial value: 2000 [r/mi n]
396.0	Target speed 5	Initial value: 2500 [r/mi n]
397.0	Target speed 6	Initial value: 3000 [r/mi n]
398.0	Target speed 7	Initial value: 4000 [r/mi n]
399.0	Target speed 8	Initial value: 5000 [r/mi n]

Note 1) Time for speed command from 0 [r /mi n] to 1000 [r /mi n].

Note 2) Time for speed command from 1000 [r /mi n] to 0 [r /mi n].

Points

The speed setting parameter from [392.0] to [399.0] can be set in the specified range, but some models cannot reach the speed shown on the setting pane. For the target speed setting, please refer to the specification of the motor.

8.4.3 Test run (Internal speed command)

■Before test run

Table 8.4.4

	Make sure all the wiring are connected properly before switch on the power to the drive and motor.	To prevent electric shock, fire, malfunction and injury.
	Test run after setting the basic parameters.	If set the wrong basic parameters, the motor will not run, run unsteadily or lose control, which may cause some injury or accidents.
	Confirm the operation of the motor alone first before test run. (Remove the other connection to the mechanics.)	The unexpected movements, such as unstable action or lose control, may cause tome injury or accidents.
	Drive the motor after release the brake on the motor if the motor is attached with the brake.	If not, it may cause the malfunction to the brake and motor.

■Test run

Table 8.4.5 Steps for test run (Internal speed command)

Steps	Operation
1	Make sure all the wiring are connected properly.
2	Switch on the power to the drive. Note 1)

3	Switch on the main circuit power to the drive(200V AC).
4	Make the SVON input of drive ON to start the motor excitation. (Connect the I 1 terminal to the COM-)
5	Select the target speed according to the ON/OFF combination of I 5（VCSEL1）,I 6（VCSEL2）and I 7（VCSEL3）. When I 3（VCRUN1）or I 4（VCRUN2）, it will rotate according to the setting direction. ON： COM- short-circuit OFF： COM- open-circuit

Note1: The control power supply for the models of 750W or less are supplied by external 24V DC. 1kW or more are supplied from internal. So the control power supply of models of 1kW or more can be ON or OFF by switching on or cutting off the main circuit AC power.

Table 8.4.6 Motor rotation direction of internal speed command

Motor rotation direction	**Operation**	
	（I 3）VCRUN1	**（I 4）VCRUN2**
CCW	ON	OFF
CW	OFF	ON
Motor stop	OFF	OFF
Motor stop	ON	ON

Table 8.4.7 Motor rotation of internal speed command

Target speed	**Operation**		
	I 5 (VCSEL1) **（CN1 8 pins）**	**I 6 (VCSEL2)** **（CN1 9 pins）**	**I 7 (VCSEL3)** **（CN1 10 pins）**
1	OFF	OFF	OFF
2	ON	OFF	OFF
3	OFF	ON	OFF
4	ON	ON	OFF
5	OFF	OFF	ON
6	ON	OFF	ON
7	OFF	ON	ON
8	ON	ON	ON

8.5 Torque control mode (Analog torque command input)

8.5.1 Wiring for user I/O connector (CN1)(Analog torque command input)

Table 8.5.1

Name	Symbol	Pin No.	Signal name	Contents
User I/O ●24V power supply input ●Parallel I/O ●Pulse command	CN1	1	24V	Drive control power supply 24V input
		2	G24V	Drive control power supply GND
		3	COM+/-	I/O power supply 24V input
		4	SVON	Servo ON input
		5	RESET	Alarm reset input

input ●Analog input ●ABZ output		6	HOLD	Command input restriction(Zero speed clamp)
		7	-	Reserved
		8	-	Reserved
		9	CCWL	CCW drive input restriction
		10	CWL	CW drive input restriction
		11	TLSEL1	Torque limit input
		12	COM-	I/O power supply GND
		13	MBRK	Brake release output
		14	SERVO	Servo status output
		15	-	Reserved
		16	-	Reserved
		17	T-LIMIT	Torque limit output
		18	OCZ	Encoder Z-phase output (open collector)
		19	SRDY+	Servo ready output +
		20	SRDY-	Servo ready output -
		21	ALM+	Servo alarm output+
		22	ALM-	Servo alarm output-
		23	NC1	Reserved (Disconnected)
		24	-	Reserved
		25	-	Reserved
		26	-	Reserved
		27	-	Reserved
		28	-	Reserved
		29	-	Reserved
		30	-	Reserved
		31	-	Reserved
		32	A_TRQ	Analog torque command input
		33	A_GND	Analog speed command input ground
		34	-	Reserved
		35	-	Reserved
		36	OUT_A	Encoder A phase output
		37	/OUT_A	Encoder /A phase output
		38	OUT_B	Encoder B phase output
		39	/OUT_B	Encoder /B phase output
		40	OUT_Z	Encoder Z phase output
		41	/OUT_Z	Encoder /Z phase output
		42	SG	Signal ground

		43	485	EIA-485 communication data
		44	/485	EIA-485 communication /data
		45	SG	Signal ground
		46	NC2	Reserved(Disconnected)
		47	-	Reserved
		48	-	Reserved
		49	-	Reserved
		50	-	Reserved

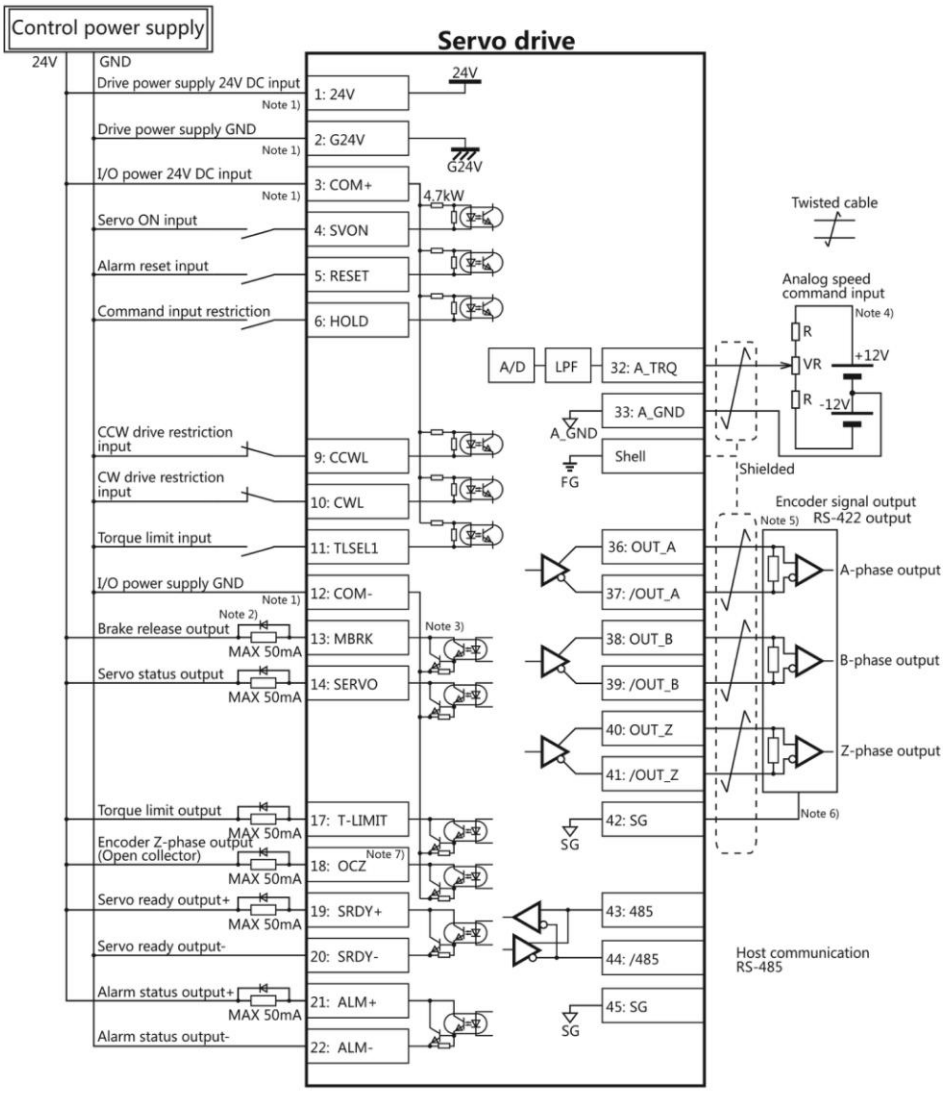

Note 1) Control power supply(24V, G24V) and I/O power (COM+, COM-) share the same power supply(For the models of 750W or less).

Note 2) If there is drive inductive load(relay), please use protective circuits(diode).

Note 3) Transistor output is an open collector output circuit of the Darlington-connected. It should be connected

with relay or optocoupler. Please don’ t connect transistor directly because the voltage VCE(SAT) between collector and emitter is about 1V which cannot meet the required voltage VIL of TTL IC when transistor is ON.

Note 4) Terminal resistance must be connected as shown in the wiring diagram.

Note 5) Terminal resistance must be connected as shown in the wiring diagram.

Note 6) Connect the signal ground on the host control device of output signal of the encoder. The connection of signal ground and power supply GND may cause malfunction.

Note 7) If the pulse width of Z-phase is too narrow to identify the host control device, please reduce the encoder pulse output division and multiplication No.276.0, 278.0 or reduce the speed to increase the pulse width.[Pulse width]=1/speed/(division and multiplication×2^{17})

8.5.2 Setting of basic parameter (Analog torque command input)

Set the basic parameters.

The following parameters must be set if the drive needs to be driven by analog torque command input.

Table 8.5.2 Parameters of control mode change (Analog torque command input)

Parameter No.	Parameter	Description
2.0	Select control mode	Set to “2”.
3.0	Select command mode	Set to “2”.

The user can select the parameter [152.0], [288.0] to [302.0] in the following table according to the actual usage.

For details, refer to 「Chapter 6 Parameter」.

Table 8.5.3 Parameters of analog torque command input

Parameter No.	Parameter	Description
152.0	Analog torque command Speed limit [rpm]	Set the speed limit value.
288.0	Analog torque command input filter (Numerator)	Filter out the input command voltage interference. Use it with parameter 302.1.
289.0	Analog torque command input filter (Denominator)	
290.0	Analog torque command input gain (Numerator)	Set the torque at the maximum command input voltage (±10V). (Note 1)
291.0	Analog torque command input gain (Denominator)	
292.0	Analog torque command CCW torque limit Override (Numerator)	Set torque limit value at CCW rotation.(Note 2)
293.0	Analog torque command CCW torque limit Override(Denominator)	
294.0	Analog torque command CW torque limit Override (Numerator)	Set torque limit value at CW rotation.(Note 2)
295.0	Analog torque command CW torque limit Override(Denominator)	
300.0	Analog speed command - Fixed offset value	The motor speed is 0[0.1%] by adjusting the command input to 0V. Use it with parameter 302.2..
302.0	Analog speed command - Rotational direction	For details, refer to table 5.5.6.
302.1	Analog speed command - Selection of input filter	Please use it with parameter 288.0, 289.0.
302.2	Analog speed command - Selection of offset tuning method	Please use it with parameter 300.0.

Note 1: Set the maximum torque for the motor in parameter 289.0(Denominator). Set the expected maximum torque in parameter 288.0(Numerator).

Example) Make the following settings if the motor with the maximum torque of 3000 [0.1%] needs to set to 1000 [0.1%] at the maximum command input voltage (±10V).

Table 8.5.4 Analog torque command input filter settings

Parameter No.	Parameter	Setting value
288.0	Analog torque command Input filter constant (Numerator)	“1000”
289.0	Analog torque command Input filter constant (Denominator)	“3000”

Note 2: Set the maximum torque for the motor in parameter 293.0, 295.0(Denominator). Set the expected torque limit value in parameter 292.0, 294.0(Numerator).

Example) Make the following settings if the motor with the maximum torque of 3000 [0.1%] needs to set to the maximum speed limit value of 1000 [0.1%].

Table 8.5.5 Analog torque command input Torque limit value settings

Rotation direction	Parameter No.	Parameter	Setting value
CCW	292.0	Analog torque command CCW torque limit value(Numerator)	“1000”
	293.0	Analog torque command CCW torque limit value (Denominator)	“3000”
CW	294.0	Analog torque command CW torque limit value (Numerator)	“1000”
	295.0	Analog torque command CW torque limit value (Denominator)	“3000”

Table 8.5.6 Parameter 302.0 settings and rotation direction of the motor (Analog torque command input)

Value of parameter 62.0	Input analog command	
	Positive voltage	Negative voltage
0		
1 [Initial value]		

8.5.3 Test run (Analog torque command input)

■Before test run

Table 8.5.7

	Make sure all the wiring are connected properly before switch on the power to the drive and motor.	To prevent electric shock, fire, malfunction and injury.
	Test run after setting the basic parameters.	If set the wrong basic parameters, the motor will not run, run unsteadily or lose control, which may cause some injury or accidents.
	Confirm the operation of the motor alone first before test run. (Remove the other connection to the mechanics.)	The unexpected movements, such as unstable action or lose control, may cause some injury or accidents.

!	Drive the motor after release the brake on the motor if the motor is attached with the brake.	If not, it may cause the malfunction to the brake and motor.

■Test run

Table 8.5.8 Steps for test run (Analog torque command input)

Steps	Operation
1	Make sure all the wiring are connected properly.
2	Switch on the power to the drive. Note 1)
3	Switch on the main circuit power to the drive(200V AC).
4	Set a smaller value about 500 in parameter 152.0(speed limit value) to limit the speed.
5	Make the SVON input of drive ON to start the motor excitation. (Connect the I 1 terminal to the COM-)
6	Input the analog torque command voltage at a low voltage to make the motor run at a low speed.
7	Improve the analog torque command voltage gradually after confirming the safe implementation of actual operation. Set the actual value in parameter 152.0(speed limit value).

Note1: The control power supply for the models of 750W or less are supplied by external 24V DC. 1kW or more are supplied from internal. So the control power supply of models of 1kW or more can be ON or OFF by switching on or cutting off the main circuit AC power.

8.6 Position control mode(Internal position command)

Set the following parameter of control mode selection and command mode selection to come into the internal position command mode. Use the locator to test run.

Table 8.6.1 Parameter of control mode change(Internal position command)

Parameter No.	Parameter	Description
2.0	Select control mode	Set to “0”.
3.0	Select command mode	Set to “3”.

8.6.1 Locator function

Execute the positioning according to the I/O command from the host control device, such as PLC.

8.6.2 Test run

Send the command from PC according to the steps, not the command from host control device(such as PLC), and have the test run, such as back and forth movement.

8.6.3 Precautions

1) Alarm code No.10 「Position command overflow/ Home position reset failure」will happen in the following two conditions.

1. Out of the range of -1, 073, 741, 823～+1, 073, 741, 823 「Command unit」
2. 「Internal position command - Overflow detection option」(Parameter No.643.0) is set to “1=Enable”

Considering the above factors, please set 「Internal position command - Overflow detection option」(Parameter No.643.0) according to the following table.

Table 8.6.2 Parameter setting of internal position command mode

Operation method(Function)		Internal position command - Overflow detection option (Parameter No.643.0)	
	Command		
Positioning function	Absolute value	0=Disable Note 1)	1=Enable
	Relative value	0=Disable	
Test run			

Note 1) The home position in the drive may disappear sometimes. Please reset the home position after parameter setting.

2) Please set 「Selection of Auto interpolation for command division and multiplication」(Parameter No.32.2) to “1=Enable”. Initial value is “1=Enable”. When “0=Disable” is set, the speed change will become large.

8.7 Description of User I/O connector (CN1) terminal arrangements

Figure 8.7.1 Terminal arrangements

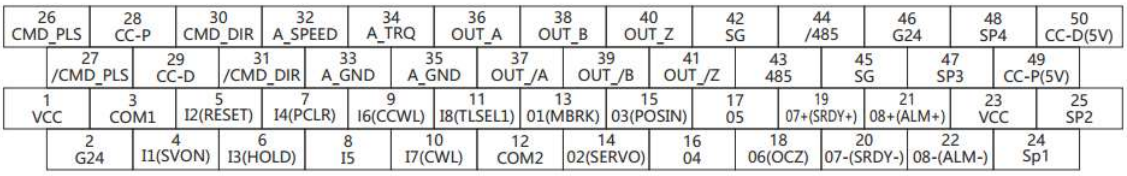

Figure 8.7.2 Connector

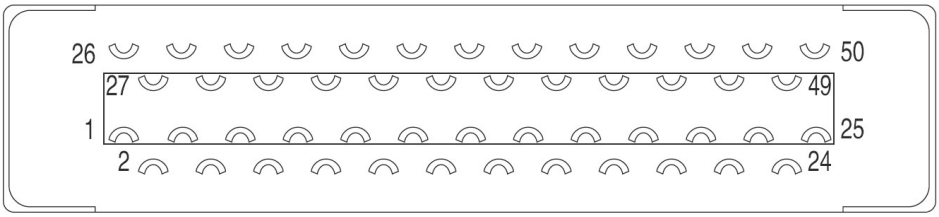

8.7.1 Signal description

Signal name	Pin No.	Contents	Function
24V	1	Drive control power supply 24V input	●Connect with +24V of 24VDC external power supply ●The power supply voltage is 24VDC±10%、100mA（Typ.） ●24VDC external power supply should meet the following condition: Using SELV power supply(※). ※SELV: safety extra low voltage (Reinforced insulation is needed for safety extra low voltage, non-dangerous voltage and dangerous voltage.)
G24V	2	Drive control power supply GND	●Connect to GND of 24VDC external power supply
COM+	3	I/O power supply 24V input	●Connect the common terminal of 24VDC power supply used for I/O and optical coupler circuit used ●Power voltage: 24VDC±10%、100mA（Typ.）
I1	4	I1 input	●Parallel I/O input ●The function varies according to the different control mode/ command mode. For details, refer to 「Table 5.7.2 I/O input signal 」 Control mode: Position control / Speed control / Torque control
I2	5	I2 input	
I3	6	I3 input	
I4	7	I4 input	
I5	8	I5 input	
I6	9	I6 input	

I7	10	I7 input	
I8	11	I8 input	
COM-	12	I/O power supply GND	●Connected with GND of 24VDC power supply used for I/O
CMD_ PLS	26	[Differential input] ①Pulse + direction pulse ②Orthogonal phase difference pulse-A ③CCW+CW Pulse CCW [5V open collector circuit] ④5V power supply of input /CMD PLS	[Differential input] Max. command pulse frequency 4Mpps ①Input pulse + direction pulse from host control device (differential input) ②Input A phase of AB phase orthogonal difference pulse signal from host control device (differential input) ③Input CCW+CCW of CW pulse from host control device (differential input) [5V open collector circuit] Max. command pulse frequency 200kpps ④5V power supply input terminal of /CMD_ PLS
/CMD_ PLS	27	[Differential input] ①Pulse + direction/ pulse ②Orthogonal phase difference pulse /A phase ③CCW+CW Pulse /CCW [5v/24v open collector circuit] ④Pulse + direction pulse ⑤Orthogonal phase difference pulse /A phase ⑥CCW+CW pulse CCW	[Differential input] Max. command pulse frequency 4Mpps ①Input pulse + direction/ pulse from host control device (differential input) ②Input /A phase of AB phase orthogonal difference pulse signal from host control device (differential input) ③Input CCW +/CCW of CW from upper control device (differential input) [5V open collector circuit] Max. command pulse frequency 200kpps ④Input pulse + pulse of direction from host control device ⑤Input A phase of AB phase orthogonal difference pulse signal from host control device ⑥Input CCW +CCW of CW pulse from host control device
CC-P	28	[24V open collector circuit input] ①24V of /CMD_PLS	[24V open collector circuit] Max. command pulse frequency 200kpps ①24V power supply input terminal of /CMD_PLS
CC-D	29	[24V open collector circuit input] ①24V of /CMD_DIR	[24V open collector circuit] Max. command pulse frequency 200kpps ①24V power supply input terminal of /CMD_DIR
CMD_ DIR	30	[Differential input]	【Differential input】Max. command pulse frequency 4Mpps

Command mode	Pulse train command	Internal regeneration command	Analog command	Internal regeneration command	Analog command
I1	SVON				
I2	RESET	RESET/PCLR	RESET	RESET	RESET
I3	HOLD	PCSTART1	HOLD	VCRUIN1	HOLD
I4	PCLR	PCSEL1	(Reserved)	VCRUIN2	(Reserved)
I5	(Reserved)	PCSEL2	(Reserved)	VCS L1	(Reserved)
I6	CCW	PC EL3	CCWL	VCSEL2	CCWL
I7	CWL	PCSEL4	CWL	VCSEL3	CWL
I8	TLSEL1	ORG	TLSEL1	TLSEL1	TLSEL1

		①Pulse + direction direction ②Orthogonal phase difference B phase ③CCW+CW pulse CW [5V open collector circuit] ④5V power supply input of /CMD_DIR	①Input pulse + direction direction from host control device(differential input) ②Input B phase of AB phase orthogonal phase difference pulse signal from host control device(differential input) ③Input CCW+CW of CW pulse from host control device (differential input) [5V open collector circuit] Max. command pulse frequency 200kpps ④5V power supply input terminal of /CMD_DIR.
/CMD_DIR	31	[Differential input] ①Pulse + direction /direction ②Orthogonal phase difference /B phase ③CCW+CW pulse /CW [5V/24V open collector circuit] ④Pulse + direction direction ⑤Orthogonal phase difference B phase ⑥CCW+CW pulse CW	【Differential input】Max. command pulse frequency 4Mpps ①Input pulse + direction /direction from host control device(differential input) ②Input /B phase of AB phase orthogonal phase difference pulse signal from host control device(differential input) ③Input CCW+CW pulse /CW from host control device (differential input) [5V/24V open collector circuit] Max. command pulse frequency 200kpps ④Input pulse+ direction of direction from host control device ⑤Input B phase of AB phase orthogonal difference pulse signal from host control device ⑥Input CCW+CW of CW pulse from host control device
A_SPEED/ A_TRQ	32	Analog speed command input/ Analog torque command input+	●Input speed or torque command in the voltage from -10V to 10V.
A_GND	33	Signal ground Analog speed command input - / Signal ground Analog torque command input - /	●Connect the signal ground of analog speed input or analog torque input in the servo drive.
SG	42	Signal ground	●Signal ground of ABZ phase output of position feedback
485	43	485 of RS-485 communication	●485 data (+) signal of RS-485 communication with host control device
/485	44	/485 of RS-485 communication	●/485 data (+) signal of RS-485 communication with host control device
SG	45	Signal ground	●Signal ground of RS-485 communication with host control device
CC-P(5V)	49	[5V open collector input] ①5V for /CMD_PLS	[5V open collector input] Max. pulse frequency 200kpps ①5V power input terminal of /CMD_PLS

		Built-in current limiting resistor	
CC-D(5V)	50	[5V open collector input] ①5V for /CMD_DIR Built-in current limiting resistor	[5V open collector input] Max. pulse frequency 200kpps ①5V power input terminal of /CMD_DIR

Table 8.7.2 I/O input signal

Signal name	Contents	Function	Control mode		
			P	S	T
SVON	Servo ON	●Servo is ON when connecting COM-.	○	○	○
RESET	Alarm reset	●Reset alarms when connecting to COM-. ●But if alarm occurs in encoder, model No. and system, this signal cannot be used to reset, and drive control power supply must be restarted(OFF→ON).	○	○	○
HOLD	Command input restriction	●When COM- connected, command input is restricted. ●If not connected, command input are permitted. ●Even if pulse is input, the motor cannot operate until the host control device allows command input. ●When 「Command input prohibited」, whether to clear pulse counter can be set by parameter No.67.3(the selection of position deviation counter in drive input) ●When the speed command value is 0 in speed control mode, the motor will not operate.	△	△	○
PCLR	Deviation counter clear	●When COM- connected, position deviation counter will be cleared.	△	-	-
CCWL	CCW drive restriction	●If COM- disconnected, CCW direction drive is prohibited. ●If the value is beyond the CCW direction movement range, please make the wiring which can be disconnected with COM-. ●It is effective when 「2: Enable CCW-drive restriction」or「3: Enable CW/CCW-drive restriction」is selected in parameter No.67.0「Selection of Drive restriction options」. Initial value: 「0: Disable」 ●The deceleration can be selected in parameter No.67.1 「Deceleration method selection when Drive restriction is enabled 」. Initial value: 「1: Short brake」. ●After-stop state can be selected in parameter No.67.2 「Selection for Stop condition when Drive restriction is enabled」. Initial value: 「0: Free-run」 ●Parameter No.67.3 「Selection for Location deviation counter option when Drive restriction is enabled」can be set to hold the position deviation counter. Initial value: 「0: Keep」	△	△	○
CWL	CW drive restriction	●If COM- disconnected, CW direction drive is prohibited. ●If the value is beyond the CW direction movement range, please make the wiring which can be disconnected with COM-. ●It is effective when 「2: Enable CW-drive restriction」or「3: Enable CW/CCW-drive	△	△	○

<table>
<tr><td></td><td></td><td>restriction」is selected in parameter No.67.0「Selection of Drive restriction options」. Initial value: 「0: Disable」
●The deceleration can be selected in parameter No.67.1 「Deceleration method selection when Drive restriction is enabled 」. Initial value: 「1: Short brake」.
●After-stop state can be selected in parameter No.67.2 「Selection for Stop condition when Drive restriction is enabled」. Initial value: 「0: Free-run」
●Parameter No.67.3 「Selection for Location deviation counter option when Drive restriction is enabled」can be set to hold the position deviation counter. Initial value: 「0: Keep」</td><td></td><td></td><td></td></tr>
<tr><td>TLSEL1</td><td>Torque limit</td><td>●Torque limit switch.
●It is effective when 「1: Enable」 is selected in parameter No.144.0「Enable/Disable Torque command limit Override」
●At open circuit, the parameter No.147.0「Torque command limit Override 1」is preferred. At power On, the parameter No.148.0「Torque command limit Override 2」is preferred.</td><td>△</td><td>○</td><td>○</td></tr>
<tr><td>PCSTART1</td><td>CW start</td><td>●It is effective when the parameter No.642.0 「Internal speed command - Operation mode」 is set to “0=Point table”.
●When PCSEL1 to 4 is specified to point No. and connected to COM-, point table No. and home position reset can execute.</td><td>△</td><td>-</td><td>-</td></tr>
<tr><td>PCSEL1
PCSEL2
PCSEL3
PCSEL4</td><td>Selection 1 of point No.
Selection 2 of point No.
Selection 3 of point No.
Selection 4 of point No.</td><td>●Specify the point No. and home position reset to be executed.
●According to the setting of parameter No.646.3 「Point No.0 function selection」, when specifying the point No.0, you can select home position reset or point No..
<table>
<tr><th>Point No.</th><th>PCSEL1</th><th>PCSEL2</th><th>PCSEL3</th><th>PCSEL4</th></tr>
<tr><td>0 or home position reset</td><td>OFF</td><td>OFF</td><td>OFF</td><td>OFF</td></tr>
<tr><td>1</td><td>ON</td><td>OFF</td><td>OFF</td><td>OFF</td></tr>
<tr><td>2</td><td>OFF</td><td>ON</td><td>OFF</td><td>OFF</td></tr>
<tr><td>3</td><td>ON</td><td>ON</td><td>OFF</td><td>OFF</td></tr>
<tr><td>4</td><td>OFF</td><td>OFF</td><td>ON</td><td>OFF</td></tr>
<tr><td>5</td><td>ON</td><td>OFF</td><td>ON</td><td>OFF</td></tr>
<tr><td>6</td><td>OFF</td><td>ON</td><td>ON</td><td>OFF</td></tr>
<tr><td>7</td><td>ON</td><td>ON</td><td>ON</td><td>OFF</td></tr>
<tr><td>8</td><td>OFF</td><td>OFF</td><td>OFF</td><td>ON</td></tr>
<tr><td>9</td><td>ON</td><td>OFF</td><td>OFF</td><td>ON</td></tr>
<tr><td>10</td><td>OFF</td><td>ON</td><td>OFF</td><td>ON</td></tr>
<tr><td>11</td><td>ON</td><td>ON</td><td>OFF</td><td>ON</td></tr>
<tr><td>12</td><td>OFF</td><td>OFF</td><td>ON</td><td>ON</td></tr>
<tr><td>13</td><td>ON</td><td>OFF</td><td>ON</td><td>ON</td></tr>
<tr><td>14</td><td>OFF</td><td>ON</td><td>ON</td><td>ON</td></tr>
<tr><td>15</td><td>ON</td><td>ON</td><td>ON</td><td>ON</td></tr>
</table></td><td>△</td><td>-</td><td>-</td></tr>
</table>

<table>
<tr><td>(HOME)^N
ote 1)</td><td>Home position reset start</td><td>●Start home position reset after connecting COM-.</td><td>△</td><td>-</td><td>-</td></tr>
<tr><td>ORG</td><td>Home position sensor</td><td>●Home position reset with home position sensor, input the home position sensor signal.
●Polarity detection can be changed by parameter No.646.1 「Home position sensor input polarity」. When the initial setting is to be connected to COM- and OFF, the home position sensor is detected.</td><td>△</td><td>-</td><td>-</td></tr>
<tr><td>VCRUN1</td><td>Internal speed command start 1</td><td>●Enable when select “1=Trapezoid speed command” in parameter No.388.0.
●After connecting to COM-, the motor starts in CCW direction.
●Set acceleration/deceleration time and target speed in parameter No.390 to No.399.0. There are 8 phases for target speed. The target speed can be switched by the combination of VCSEL1, VCSEL2 and VCSEL3.</td><td>-</td><td>△</td><td>-</td></tr>
<tr><td>VCRUN2</td><td>Internal speed command start 2</td><td>●Enable when select “1=Trapezoid speed command” in parameter No.388.0.
●After connecting to COM-, the motor starts in CW direction.
●Set acceleration/deceleration time and target speed in parameter No.390 to No.399.0. There are 8 phases for target speed. The target speed can be switched by the combination of VCSEL1, VCSEL2 and VCSEL3.</td><td>-</td><td>△</td><td>-</td></tr>
<tr><td>VCSEL1
VCSEL2
VCSEL3</td><td>Internal command selection 1
Internal command selection 2
Internal command selection 3</td><td>●Enable when select “1=Trapezoid speed command” in parameter No.388.0.
●Select the speed command of 8 phases as shown below according to the combination of speed command selection 1 to 3.
●Set acceleration/deceleration time and target speed in parameter No.390 to No.399.0.
<table>
<tr><th>Target speed</th><th>VCSEL1</th><th>VCSEL2</th><th>VCSEL3</th></tr>
<tr><td>1</td><td>OFF</td><td>OFF</td><td>OFF</td></tr>
<tr><td>2</td><td>ON</td><td>OFF</td><td>OFF</td></tr>
<tr><td>3</td><td>OFF</td><td>ON</td><td>OFF</td></tr>
<tr><td>4</td><td>ON</td><td>ON</td><td>OFF</td></tr>
<tr><td>5</td><td>OFF</td><td>OFF</td><td>ON</td></tr>
<tr><td>6</td><td>ON</td><td>OFF</td><td>ON</td></tr>
<tr><td>7</td><td>OFF</td><td>ON</td><td>ON</td></tr>
<tr><td>8</td><td>ON</td><td>ON</td><td>ON</td></tr>
</table></td><td>-</td><td>△</td><td>-</td></tr>
<tr><td>(RESET/ PCLR)
Note 1)</td><td>Alarm clear/ deviation counter clear</td><td>●After connecting with COM-, RESET and PCLR are executed.</td><td>△</td><td>-</td><td>-</td></tr>
</table>

※Control mode:

P: Position control mode, S: Speed control mode, T: Torque control mode indicates it can input signals 「○」 and 「△」 in different control modes. 「△」can switch signals according to command mode. For details, please refer to user I/O connector CN1 terminal arrangements for each command mode.

Note 1) For I/O of locator function selection 1.

<table>
<tr><th>Signal name</th><th>Pin No.</th><th>Contents</th><th>Function</th></tr>
<tr><td>01</td><td>13</td><td>01 output</td><td rowspan="6">●Parallel I/O output
●07+, 07-, 08+ and 08- is differential output.
●Function varies according to different control modes and command modes. For details, refer to the following table.
<table>
<tr><td>Control mode</td><td colspan="2">Position control</td><td colspan="2">Speed control</td><td>Torque control</td></tr>
<tr><td>Command mode</td><td>Pulse train command</td><td>Internal regeneration command</td><td>Analog command</td><td>Internal regeneration command</td><td>Analog command</td></tr>
<tr><td>01</td><td colspan="5">MBRK</td></tr>
<tr><td>02</td><td colspan="5">SERVO</td></tr>
<tr><td>03</td><td>POSIN</td><td>MEND</td><td colspan="3">(Reserved)</td></tr>
<tr><td>04</td><td>(Reserved)</td><td>HEND</td><td colspan="3">(Reserved)</td></tr>
<tr><td>05</td><td colspan="5">T-LIMIT</td></tr>
<tr><td>07+</td><td colspan="5" rowspan="2">SRDY</td></tr>
<tr><td>07-</td></tr>
<tr><td>08+</td><td colspan="5" rowspan="2">ALM</td></tr>
<tr><td>08-</td></tr>
</table></td></tr>
<tr><td>02</td><td>14</td><td>02 output</td></tr>
<tr><td>03</td><td>15</td><td>03 output</td></tr>
<tr><td>04</td><td>16</td><td>04 output</td></tr>
<tr><td>05</td><td>17</td><td>05 output</td></tr>
<tr><td>07+</td><td>19</td><td>07 output +</td></tr>
<tr><td>07-</td><td>20</td><td>07 output -</td></tr>
<tr><td>08+</td><td>21</td><td>08 output +</td></tr>
<tr><td>08-</td><td>22</td><td>08 output -</td></tr>
<tr><td>06(OCZ)</td><td>18</td><td>Encoder Z phase output</td><td>●Open collector output of encoder Z-phase signal
●If the Z-phase pulse width is too narrow to be identified by host control device, we can set parameter No.276.0, 278.0 「Encoder pulse output division and multiplication」 to reduce the division and multiplication. Or reduce the speed to expand the pulse width. [Pulse width]=1/ speed/(division and multiplication $\times 2^{17}$).
●Note 1)</td></tr>
<tr><td>OUT_A</td><td>36</td><td>Encoder A phase</td><td>●Output position A phase signal to host control device(differential output).</td></tr>
<tr><td>/OUT_A</td><td>37</td><td>Encoder A phase</td><td>●Output position A phase signal to host control device(differential output).</td></tr>
<tr><td>OUT_B</td><td>38</td><td>Encoder B phase</td><td>●Output position B phase signal to host control device(differential output).</td></tr>
<tr><td>/OUT_B</td><td>39</td><td>Encoder B phase</td><td>●Output position B phase signal to host control device(differential output).</td></tr>
<tr><td>OUT_Z</td><td>40</td><td>Encoder Z phase</td><td>●Output position Z phase signal to host control device(differential output).
●Note 1)</td></tr>
</table>

/OUT_Z	41	Encoder Z phase	●Output position Z phase signal to host control device(differential output). ●Note 1)

Note 1) Z-phase pulse width: Encoder resolution × Division and multiplication (Parameter No.276.0/No.278.0) and the motor speed. Z-phase pulse and A-phase pulse are output simultaneously.

Table 8.7.3 I/O output signal

Signal name	Contents	Function	Control mode		
			P	S	T
MBRK	Brake release	●After the electromagnetic brake is released, the connection with COM- should is OFF.	○	○	○
SERVO	Servo status	●When the servo is ON, the connection with COM- is OFF.	○	○	○
POSIN	Positioning completion	●After positioning was completed, the connection with COM- is OFF.	○	-	-
SRDY	Servo ready	●OFF at servo ready. When there is voltage in main circuit and no alarm, the servo can be ON.	○	○	○
ALM	Alarm status	●Open circuit at alarms and power OFF. Closed circuit at power ON.	○	○	○
T-LIMIT	Torque limit	●If the output torque of the motor is limited, the connection with COM- is closed. ●Select the output condition according to "Selection of Torque limit state output mode".	○	○	○
MEND	Action completion	●When the action of point table, communication and home position reset is completed and the next step will start, the connection with COM- is closed circuit. ●Closed circuit at power OFF.	△	-	-
HEND	Home position reset completion	●After the home position reset is completed, the connection with COM- is closed circuit. When the home position disappears or home position reset, the connection with COM- is open circuit.	△	-	-
(PM1) Note 1)	Point No. output 1	According to the output signal allocated by the special I/O setting "Position control/ Internal regeneration command customized 1). ●Output the start or end of the Point NO.. ●Select the time and contents of Point No. according to the setting of Parameter No.644.0 "Point No. output method". ●Open circuit (Point No. 0) when the drive power supply is ON and servo OFF, home position reset.	△	-	-
(PM2) Note 1)	Point No. output 2				
(PM3) Note 1)	Point No. output 3				

PM1	PM2	PM3	Contents
OFF	OFF	OFF	Point No.0, 8 and so on
ON	OFF	OFF	Point No. 1, 9
OFF	ON	OFF	Point No.2, 10
ON	ON	OFF	Point No.3, 11
OFF	OFF	ON	Point No.4, 12
ON	OFF	ON	Point No.5, 13
OFF	ON	ON	Point No.6, 14

		ON	ON	ON	Point No.7, 15			
(MEND/ TLIMIT) Note 1)	Action completion/ Torque limit	●Output signal allocated by special I/O setting "Position control/ Internal regeneration command selection 1". ●Either MEND or T-LIMIT is ON, the connection with COM- is closed circuit. ●For details, refer to the function of MEND and T-LIMIT in this table.				△	-	-

※Control mode:

P: Position control mode, S: Speed control mode, T: Torque control mode indicates it can input signals 「○」 and 「△」 in different control modes. 「△」can switch signals according to command mode. For details, please refer to user I/O connector CN1 terminal arrangements for each command mode.

Note 1) For I/O of locator function selection 1.

Table 8.7.4 Reserved pins

Signal name	Pin No.	Contents	Function
NC1	23	Reserved	●Reserved(Disconnected)
SP1	24	Reserved	-
SP2	25	Reserved	-
A_TRQ	34	Reserved	-
A_GND	35	Reserved	-
NC2	46	Reserved	●Reserved(Disconnected)
SP3	46	Reserved	-
SP4	48	Reserved	-

8.8 Adjustment

Table 8.8.1

!	Before auto tuning, perform the safety measures, such as danger-prevention, immediate stop and impact reducing.	To prevent the injury and accidents caused by unexpected unstable operation and too much impact.
!	In the auto tuning, the servo motor will operate at the speed lower than the acceleration/deceleration. After confirm it can operate safely, improve the acceleration /deceleration gradually and adjust them.	To prevent the injury and accidents caused by unexpected unstable operation and too much impact.

■The following occasions may not be suitable for auto tuning.

●The inertia is too small, or too large, or the load inertia changes a lot.

●Mechanical rigidity is too low

●Speed is too low(300r/min or less), and acceleration/deceleration is slow.

●Unbalance load and friction is too large, or the torque is too large or too small

In this case, please set the inertia ratio according to the calculated value.

■The noise and vibration may occur before the estimated load characteristic settles at servo ON or control gain level changes. After settling, the error may disappear. If not, perform the following measures.

●Reduce the control gain level

●Set the inertia ratio according to the calculated value in the mechanical device.

8.8.1 Simple tuning

■Parameter description

①Selection of inertia condition (only for position control mode)

The characteristic of inertia condition are shown is Table 8.8.2 and Figure 8.8.1. Select it according to the device load characteristic.

1: Applicable for the device that needs to control the heavy load, or the device that the load changes a lot, or the device of low rigidity (emphasis on stability).

2: Standard setting

3: Applicable for the device that needs to adjust the light load(emphasis on convergence)

Table 8.8.2 The correspondence between the setting value of inertia condition and characteristics

Setting value	Stability of the corresponding load change	Convergence rate	Position deviation at constant speed
1	Strong	Slow	Small
2	↕	↕	↕
3	Weak	Quick	Large

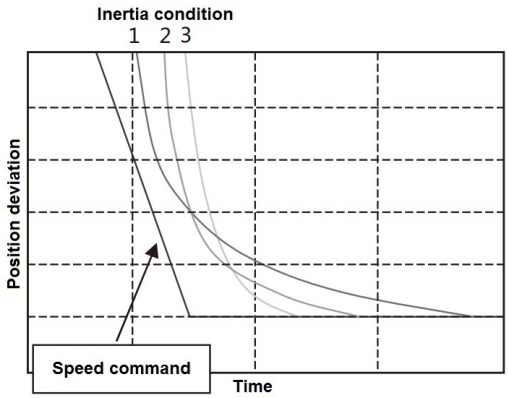

Figure 8.8.1 Convergence difference of position deviation by inertia condition

②Selection of control gain set

■Parameter No.113.0(position control) and No.129.0(speed control)

Control gain set is to change the parameter of control gain 1, control gain 2 and integral gain simultaneously.

If the setting value is larger, the traceability of corresponding command gets better, the interference response gets higher, and the setting time gets shorter. If the setting value is too large, the servo may vibrate. Adjust the response correspondingly in the condition that the servo does not vibrate. Set the smaller setting value in the beginning, then increase the value slowly while confirm the operation.

For models of 750W or less, select from 10, 20,30.

For models of 1kW or more, select from 5,10,15.

③Auto tuning mode

■Parameter No.110.0

Select 1(standard mode) in the condition that there's no unbalance in the horizontal axis. Select 2 (Unbalanced mode) when there's the unbalance.

■Procedures for auto tuning

Table 8.8.3 Procedures for auto tuning

Steps	Operation
1	Make sure all the wiring is correct.
2	Supply the control power to the drive (Note 1)

3	Power ON the main circuit of the dive(200VAC)	
4	The SVON input of the drive is ON, the motor starts excitation. (I1 and COM – are connected)	
5	The motor operates at the low speed according to the command pulse output by the upper controller.	
6	Please follow the methods below to auto tuning.	
	■Methods by set panel	[Table 8.8.4 auto tuning (by set panel)]

Note 1: The control power supply for the models of 750W or less are supplied by external 24V DC. 1kW or more are supplied from internal. So the control power supply of models of 1kW or more can be ON or OFF by switching on or cutting off the main circuit AC power.

■By set panel

Table 8.8.4 Auto tuning (By set panel)

Display and operation	**Description**	
	Initial display.	
Press MODE for five times	Switch to the set panel.	
	Switch to the auto tuning mode	
Press SET once	Enter into the auto tuning mode	
	Press SET ,▲▼button to change the inertia condition. Press the SET button to set the inertia condition(from flicker to ON). Press the MODE button to return.	
Press ▲ once	Parameter display change.	
	Press SET ,▲▼button to change the control gain. Press the SET button to set the control gain(from flicker to ON). Press the MODE button to return.	
	Points to note	At adjustment, if vibration occurs, decrease the setting value to no vibration.
Press ▲ twice	Parameter display change.	
	Press SET ,▲▼button to change the auto tuning. Press the SET button to set the auto tuning(from flicker to ON). Press the MODE button to return.	
Press ▲ once	Parameter display change.	
	Selection whether to use of real-time auto tuning	
Press SET once	Selection whether to use of real-time auto tuning	
	Display the setting value of the parameter. Initial value:"0". The digit that can be changed will flicker.	
Press ▲ twice	Press the UP button to change the setting value.	
	"2"=Select [inertia ratio + damping ratio]	
Press SET once	When the parameter is set to drive RAM, the digit will change from flicker to ON. Auto tuning begins at the same time.	
Press MODE once	Return to the parameter selection.	
Press SET once	Display the setting value of Selection whether to use of real-time auto tuning	
	Display the setting value of the parameter. Setting value:2. The digit that can be changed will flicker.	
Press ▼ once	Press the DOWN button to change the setting value.	

F00000	Select “0” = [Disable real-time auto tuning]	
Press SET once	When the parameter is set to the drive RAM, the digit will change from flicker to ON. Meanwhile, the auto tuning stops.	
Press MODE once	Return to the parameter selection.	
Press ▼ three times	Change parameter display.	
P_GSET	Press SET to change the control gain level. Press ▲▼button to change the value. Press the SET button to set (from flicker to ON).	
	Points to note	To get the desired response, set the control gain level again.
Press MODE twice	Auto tuning completed and switch to the set panel mode.	
SAVE_P	Switch to parameter saving mode.	
Press SET once	The parameter is stored to EEPROM. ([P] in [SAVE_P] will flicker.)	
Nr_End	Normal completion.	

8.8.2 Fine tuning

①Control level adjustment

The adjustment method of control level(position control) No.114.0 is shown below.

Control level is the parameter that the combination of control gain 1 and control gain 2 changed.

Increasing the control level can help to get better command traceability and shorten the setting time. And the response has also improved. If higher, vibration may occur. Please adjust it to the required response in the absence of vibration.

Furthermore, overshoot occurs if set the higher [Gain FF compensation 1 (Position control)(No.117.0)] and improve the control level. To avoid the overshoot, adjust the control level after reducing the [Gain FF compensation 1 (Position control)(No.117.0)] .

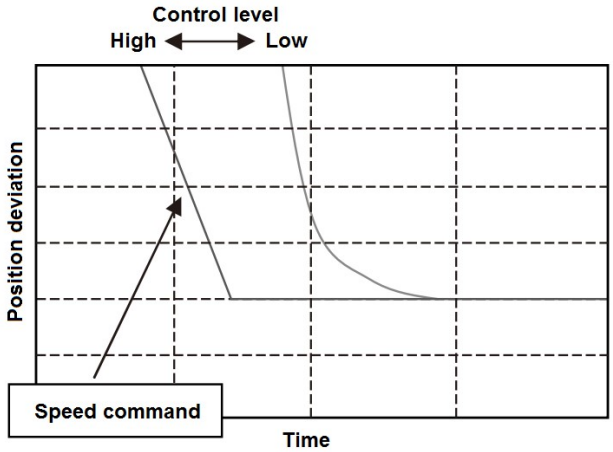

Figure 8.8.3 Position deviation convergence difference set by control level

②Integral gain adjustment

The adjustment method of [Integral gain (position control)(Parameter No.119.0) is shown below.

Increasing the integral gain can reduce the influence to the convergence caused by friction or load change and shorten the setting time. But if higher, vibration may occur. Please adjust it to the required response in the absence of vibration.

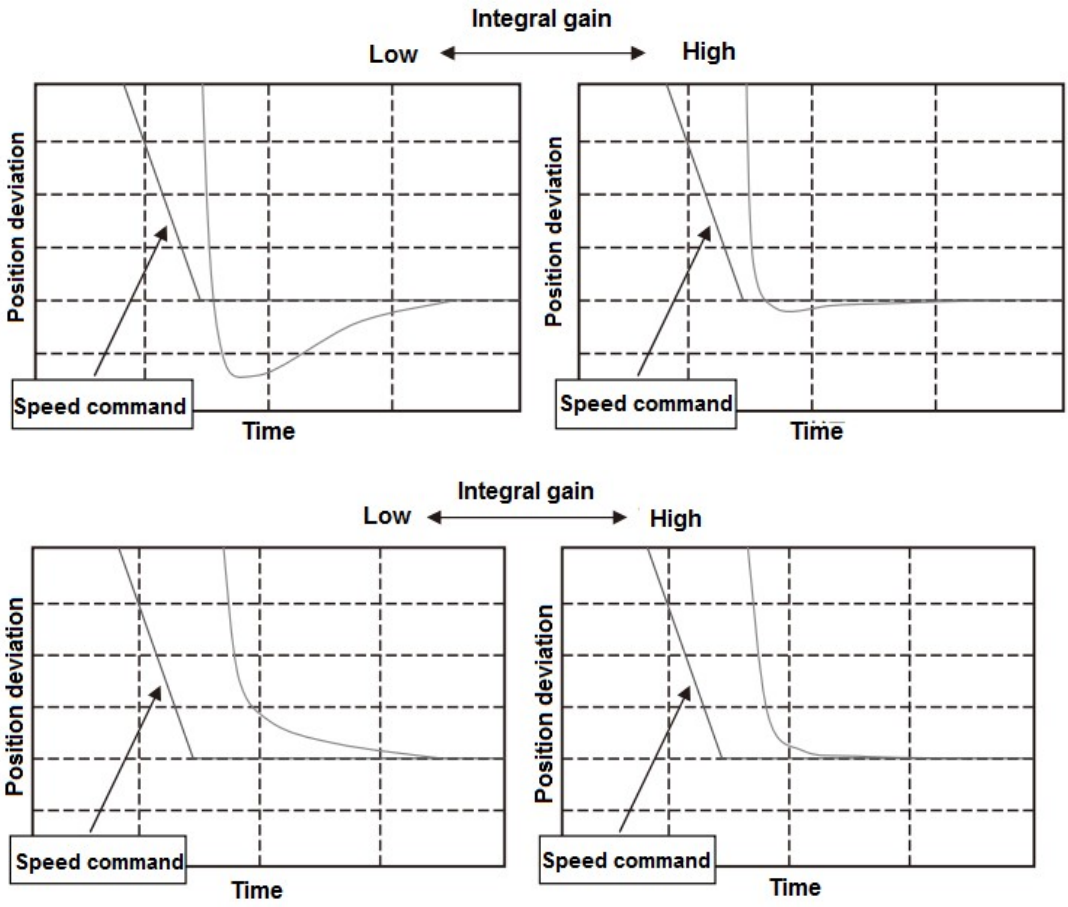

Figure 8.8.4 Position deviation convergence difference set by integral gain

③Gain FF compensation 1 adjustment

The adjustment method of Gain FF compensation 1(Position control) No.117.0 is shown below.

If the Gain FF compensation 1 is higher, the setting time is shorter. But if too high, overshoot may occur. Please adjust it to the required response in the absence of overshoot.

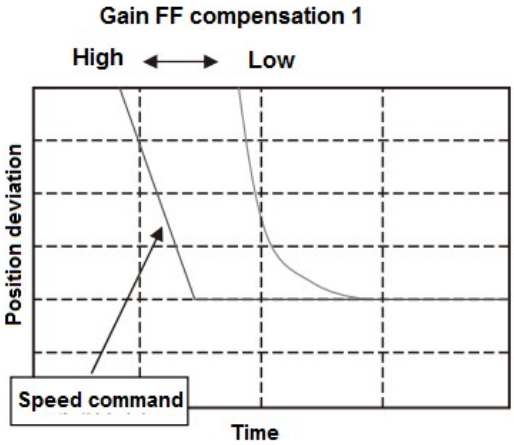

Figure 8.8.5 Position deviation convergence difference set by Gain FF compensation 1

④Gain FF compensation 2 adjustment

The adjustment method of Gain FF compensation 2(Position control) No.118.0 is shown below.

Please set the correct inertia ratio. If the setting value is 10000, the position deviation is least. If the value is more than 10000,

the position deviation will be on the negative side(over compensation).

If set the bigger value at lower resolution, the operation noise will become louder. If the position deviation in the operation has no any other problems, the setting value can be 0.

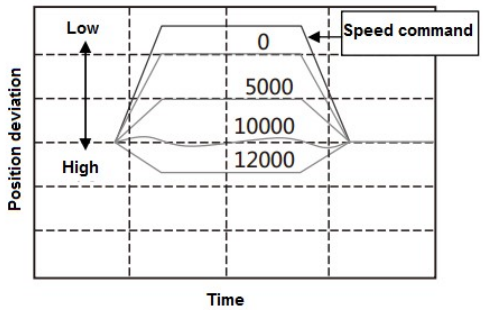

Figure 8.8.6 Position deviation convergence difference set by Gain FF compensation 2

8.8.3 Vibration reduction adjustment

①Vibration reduction methods for smoothing filter

The adjustment method for [Position command smoothing filter 1(No.66.0)] and [Position command smoothing filter 1 Moving average order(No.80.0)] are shown below.

Set the [Position command smoothing filter 1(No.66.0)] to “1” and set the [Position command smoothing filter 1 Moving average order(No.80.0)] to the value calculated by the cycle time of vibration. The bigger the value is, the longer the command delay time is.

Formula: Parameter No.80.0 setting value=Vibration cycle time [s] ×6, 250（750W or less）

Parameter No.80.0 setting value=Vibration cycle time [s] ×5, 000（1Kw or more）

In this example, the vibration cycle time is 39ms, and the average order is 6250×0. 039＝243.

The delay tie is 243×0. 16ms＝38. 88ms.

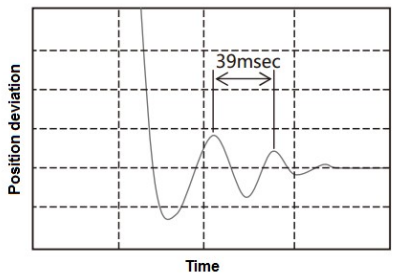

Figure 8.8.7 Before Position command smoothing filter 1 setting

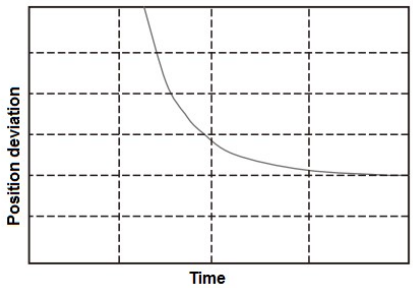

Figure 8.8.8 After Position command smoothing filter 1 setting

②Vibration reduction methods for notch filter

The adjustment method for torque command notch filter No.160.1, 168. 0、169. 0. 170. 0 are shown below. Set the [Torque command Selection of whether to use notch filter(No.160.1)] to “1” and set the vibration frequency in the [Torque command Notch filter frequency(No.168.0)]. The vibration frequency is calculated from the waveform such as the torque command when

the vibration occurs.

When the gap is too big, even if setting the notch filter, the resonance cannot be suppressed completely. At this time, increase the [Torque command Notch filter depth selection(No.170.0)] to get the shallower filter performance. When multiple notch frequency exist, increase the [Torque command Notch filter width selection(No.169.0)] to widen the notch frequency.

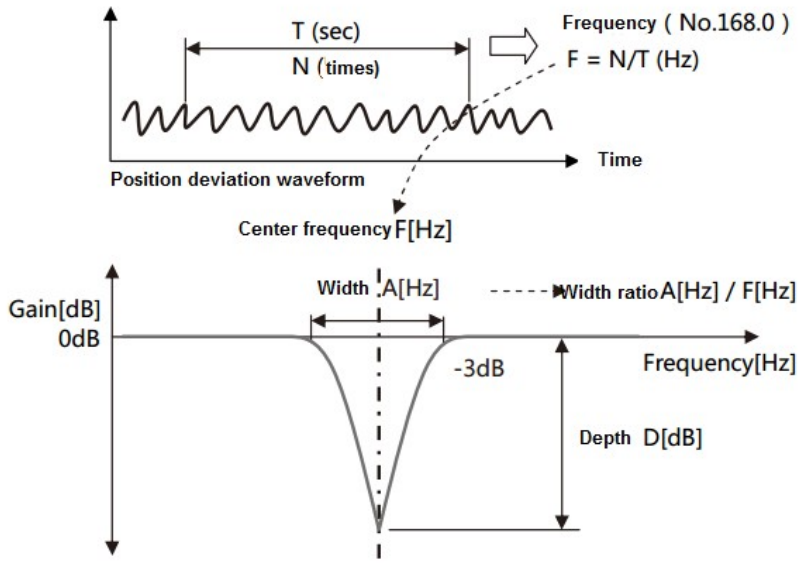

Width ratio=[Torque command Notch filter width selection(No.169.0)] ×0. 125
Depth ratio=[Torque command Notch filter depth selection(No.170.0)] ／256

③Vibration reduction methods for low-pass filter

The adjustment method for torque command low-pass filter No. 160. 0、162. 0 are shown below.

Set the [Option for Torque command low-pass filter(No. 160. 0) to “1”(Enable). The default value is “1”(Enable) at factory shipment. Increasing [Torque command preliminary filter time constant for Low-pass filter(No. 162. 0)] can help to suppress the resonance. But if increase too much, it will cause some other vibration.

The maximum value is based on the following formula.

$$\frac{\{0.1 \sim 0.2\}}{\{\text{[Integral gain] or [Control gain 1 + The bigger one in Control gain 2]}\}} \text{ [s] or less}$$

8.9 Home position return

8.9.1 Overview

The home position return is the operation of coordinating the command and mechanical coordinates within the drive. When using the positioning function in the drive, perform the home position return according to the actual needs.

■Using incremental system

Home position return must be done when power-ON.

■Using absolute system

The encoder battery backs up after power OFF. So when the home position return is performed once in installation, there’s no need to have the home position return after power ON again

When using the positioning function in the drive, perform the home position return according to the actual needs.

8.9.2 Wiring and basic setting

For the wiring and basic parameter setting, refer to [Appendix 2 SV-E3 Positioner function].

■In home position return, there are Arbitrary position, Stopper and Home position DOG front end and used in the situation of selection of Z-phase as the base signal.

■The home position return can be started by user I/O input.

■If perform the home position return by Home position DOG front end, please use the user I/O input.

8.9.3 Types and parameter by home position return

1) Arbitrary position

Use the following parameter items in the box ☐ when use the arbitrary position as the base signal.

For the details of parameters, refer to [8.9.4 Parameter description].

For the examples of parameter setting method, refer to [8.9.8 Parameter description for home position return].

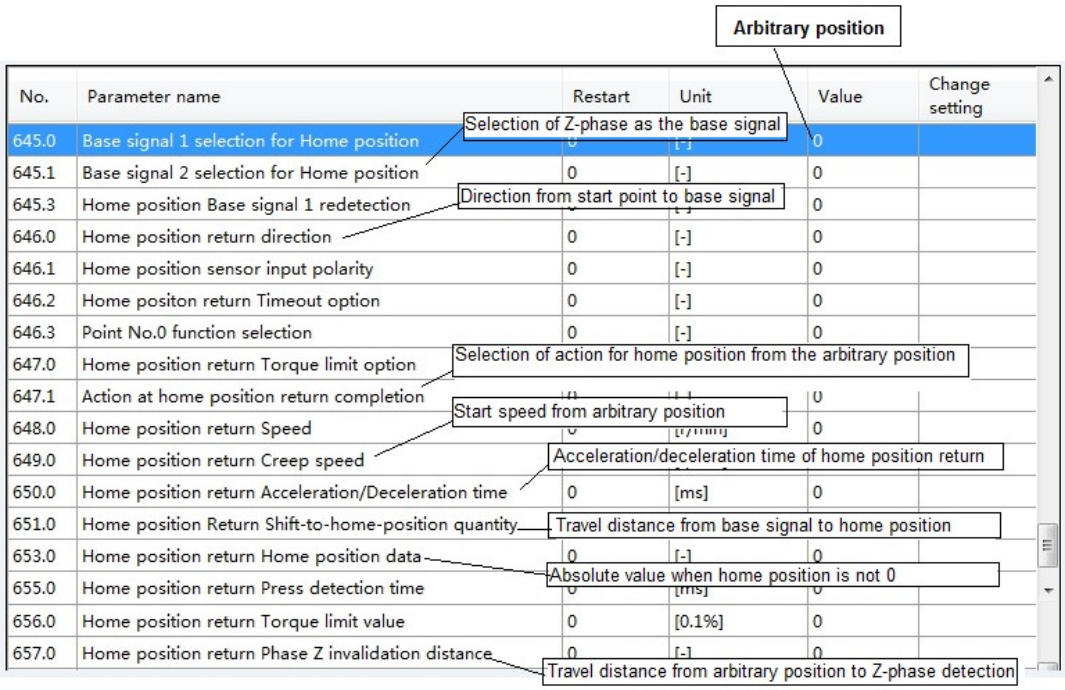

No.	Parameter name	Restart	Unit	Value	Change setting
645.0	Base signal 1 selection for Home position	0	[-]	0	
645.1	Base signal 2 selection for Home position	0	[-]	0	
645.3	Home position Base signal 1 redetection	[illegible]	[illegible]	0	
646.0	Home position return direction	0	[-]	0	
646.1	Home position sensor input polarity	0	[-]	0	
646.2	Home positon return Timeout option	0	[-]	0	
646.3	Point No.0 function selection	0	[-]	0	
647.0	Home position return Torque limit option	[illegible]	[illegible]	[illegible]	
647.1	Action at home position return completion	[illegible]	[illegible]	0	
648.0	Home position return Speed	[illegible]	[illegible]	0	
649.0	Home position return Creep speed	[illegible]	[illegible]	[illegible]	
650.0	Home position return Acceleration/Deceleration time	0	[ms]	0	
651.0	Home position Return Shift-to-home-position quantity	[illegible]	[illegible]	[illegible]	
653.0	Home position return Home position data	0	[-]	0	
655.0	Home position return Press detection time	[illegible]	[ms]	[illegible]	
656.0	Home position return Torque limit value	0	[0.1%]	0	
657.0	Home position return Phase Z invalidation distance	0	[-]	0	

Figure 8.9.1

2) Stopper

Use the following parameter items in the box ☐ when use the stopper.

For the details of parameters, refer to [8.9.4 Parameter description].

For the examples of parameter setting method, refer to [8.9.8 Parameter description for home position return].

Stopper

No.	Parameter name	Restart	Unit	Value	Change setting
645.0	Base signal 1 selection for Home position	0	[-]	1	
645.1	Base signal 2 selection for Home position	Selection of Z-phase as the base signal			
645.3	Home position Base signal 1 redetection	0	[-]	0	
646.0	Home position return direction	Direction from start point to stopper			
646.1	Home position sensor input polarity	0	[-]	0	
646.2	Home positon return Timeout option	0	[-]	0	
646.3	Point No.0 function selection	0	[-]	0	
647.0	Home position return Torque limit option	Selection of action from the stopper to home position			
647.1	Action at home position return completion	Speed to the stopper		0	
648.0	Home position return Speed			0	
649.0	Home position return Creep speed	Speed from the stopper			
650.0	Home position return Acceleration/Deceleration time	Acceleration/deceleration time of home position return	[ms]	0	
651.0	Home position Return Shift-to-home-position quantity	Travel distance from base signal to home position			
653.0	Home position return Home position data	Absolute value when home position is not 0			
655.0	Home position return Press detection time	Torque limit detection time of stopper			
656.0	Home position return Torque limit value	Torque limit value of stopper			
657.0	Home position return Phase Z invalidation distance	Travel distance from stopper to Z-phase detection			

Figure 8.9.2

3) Home position DOG front end (home position sensor)

Use the following parameter items in the box ▭ when use the Home position DOG front end.

For the details of parameters, refer to [8.9.4 Parameter description].

For the examples of parameter setting method, refer to [8.9.8 Parameter description for home position return].

Home position DOG front end

No.	Parameter name	Restart	Unit	Value	Change setting
645.0	Base signal 1 selection for Home position	0	[-]	2	
645.1	Base signal 2 selection for Home position	Selection of Z-phase as the base signal			
645.3	Home position Base signal 1 redetection	Selection of re-detection after sensor detection			
646.0	Home position return direction	Direction from start point to base signal			
646.1	Home position sensor input polarity	Selection of OFF/ON detection			
646.2	Home positon return Timeout option	0	[-]	0	
646.3	Point No.0 function selection	0	[-]	0	
647.0	Home position return Torque limit option	Selection of action from the sensor to home position			
647.1	Action at home position return completion	Speed of sensor detection			
648.0	Home position return Speed		[r/min]	0	
649.0	Home position return Creep speed	Speed after sensor detection			
650.0	Home position return Acceleration/Deceleration time	Acceleration/deceleration time of home position			
651.0	Home position Return Shift-to-home-position quantity		[-]	0	
653.0	Home position return Home position data	Travel distance from base signal to home position			
655.0	Home position return Press detection time	Absolute value when home position is not 0			
656.0	Home position return Torque limit value	0	[0.1%]	0	
657.0	Home position return Phase Z invalidation distance	Travel distance from sensor detection to Z-phase			

Figure 8.9.3

8.9.4 Parameter description

The home position return can be done by the combination of parameter setting.

The home positon return is specified by the following combination of parameters.

・No. 645. 0： Base signal 1 selection for Home position

- No. 645. 1： Base signal 2 selection for Home position
- No. 645. 3： Home position Base signal 1 redetection
- No. 646. 0： Home position return direction
- No. 647. 1： Action at home position return completion

No.	Name	Unit
645. 0	Base signal 1 selection for Home position	-

Select Base signal 1 at determine Home position

0 = Arbitrary position

1 = Stopper

2 = Home position DOG frond end [Initial value]

Take the Encoder Phase Z nearest to the current position as the base signal, set the parameter to “Arbitrary position”. Set the Base signal 2 selection for Home position (No. 645. 1) to “Encoder Phase Z”.

No.	Name	Unit
645. 1	Base signal 2 selection for Home position	-

Set another base signal(Base signal 2)for home position after detecting Base signal 1.

0 = None [Initial value]

1 = Encoder Phase Z

When setting Base signal 1 selection for Home position(No. 645. 0) to “Home position DOG frond end” and setting Base signal 2 selection for Home position to “Encoder Phase Z”, after detecting the Home position DOG front end, move the Home position return Phase Z invalidation distance(No.657.0), then set the Encoder Phase Z for the home position.

No.	Name	Unit
645. 3	Home position Base signal 1 redetection	-

The selection of redetection can be done after returning in the [Home position return Creep speed] when the Home position DOG frond end is detected by the Home position return Speed detection. To improve the detection accuracy of home position base signal, set the Home position return Creep speed to a lower value.

0 = Disable (Initial value)

1 = Enable

Only applicable for the situation that setting the [Base signal 1 selection for Home position] to “2= Home position DOG front end”.

If set to “1= Enable”, back and return to home position DOG front end after home position speed detects the home position DOG front end. The home position creep speed detects the home position DOG front end.

The start point of home position return is judged by the internal or external of the home position sensor, which depends on ORG signal of user input I/O in the home position return.

For details, refer to [8.9.5 Home position sensor exit]

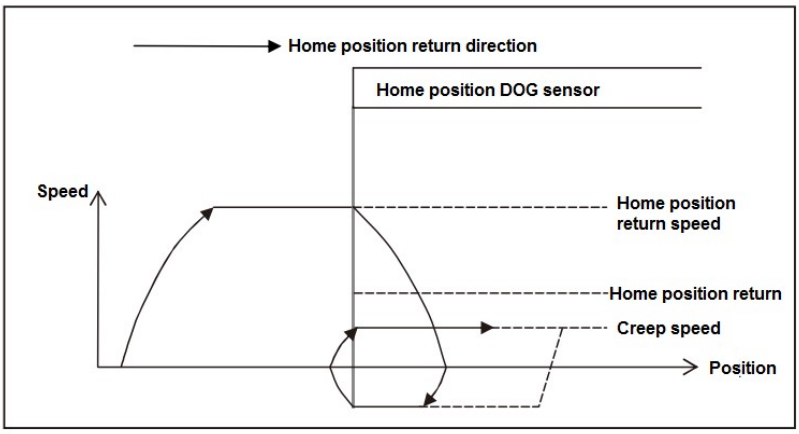

Figure 8.9.4 Home position Base signal 1 redetection

No.	Name	Unit
646.0	Home position return direction	-

Set Home position return base signal 1 direction

0 = CCW [Initial value]

1 = CW

1) Under the condition that home position base signal 1 is “Arbitrary position”.

When set the Base signal 2 selection for Home position to “1=Encoder Phase Z”, the operation direction of Encoder Phase Z can be detected, that is the home position base signal moves in the direction of home position travel distance.

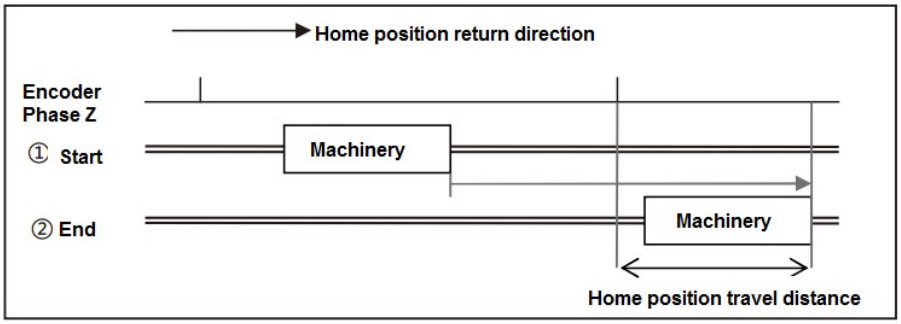

Figure 8.9.5 Home position return direction (Arbitrary position)

2) Under the condition that home position base signal 1 is “Stopper”.

The operation direction that the home position return starts.

When the Base signal 2 selection for Home position is set to “1=Encoder Phase Z”, the direction is opposite to the one of the encoder phase Z detection. Figure 8.9.6 is the example to set the home position travel distance after detecting Phase Z. The direction of moving home position travel distance from home position base signal is opposite. The home position return direction from ① Start (home position return starts) is opposite to ②Stopper is opposite to the direction from ② to ③ End (home position return completion).

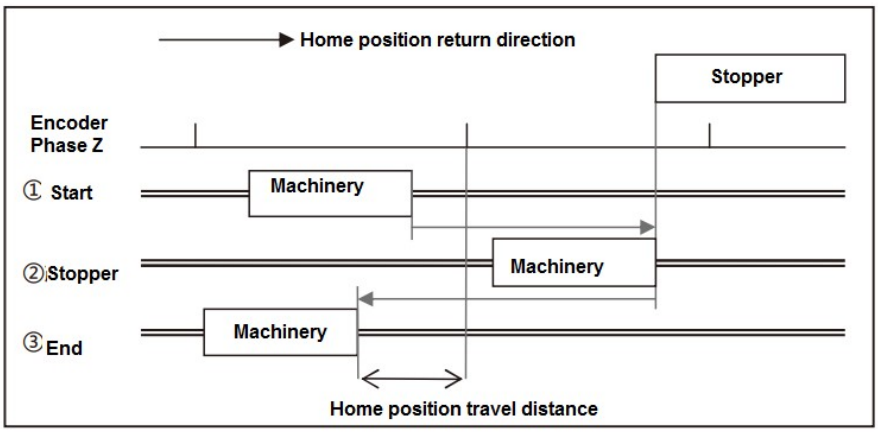

Figure 8.9.6 Home position return direction (Stopper)

3) Under the condition that home position base signal 1 is “Home position DOG frond end ”.

Set the direction from Home position DOG sensor front to Home position DOG front end.

If the start point of home position return is in the front of home position DOG sensor, it is the operation direction after home position return starts. If the start point is inside the home position DOG sensor, it moves automatically in the opposite direction of home position return. When it moves out from the home position DOG sensor, the home position DOG front end can be detected.

When the Base signal 2 selection for Home position is set to “1=Encoder Phase Z”, the direction is same to the encoder phase Z detection direction.

Figure 6.9.4 is the example of setting home position travel distance after detecting phase Z. The direction from home position base signal to home position travel distance should be set here, as the start point of home position return is inside the home position sensor. That is the direction from ①Start(home position start) to② Home position sensor detection (Home position DOG front end detection), and from ② to ③End (Home position return completion).

The direction from home position base signal to home position travel distance.

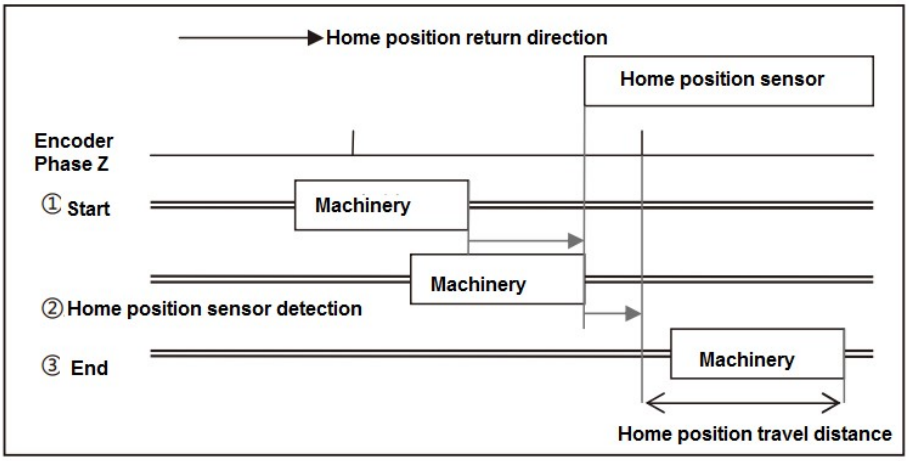

Figure 8.9.7 Home position return direction (home position DOG front end)

No.	Name	Unit
646.1	Home position sensor input polarity	-

Set Home position sensor input polarity by user I/O ORG

0 = When OFF, detect Home position dog front end [Initial value]

1 = When ON, detect Home position dog front end

Selecting “0”, detect the home position sensor at open-circuit between ORG and COM-.

Selecting “1”, detect the home position sensor at closed-circuit between ORG and COM-.

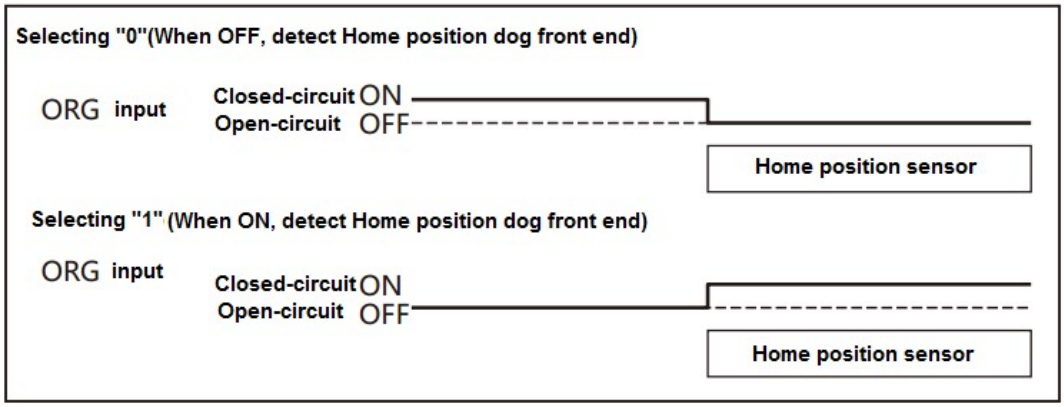

Figure 8.9.8 Home position sensor input polarity

No.	Name	Unit
646.2	Home positon return Timeout option	-

Enable/Disable Home position return Timeout.

0 = Disable

1 = Enable [Initial value]

The function corresponds to collision.

When selecting “1 =Enable”, count the elapsed time after home position return starts. If exceeding the home position return timeout(No.659.0), alarm of “Position command overflow/home position return failure” occurs and make the servo disconnect.

No.	Name	Unit
646.3	Point No.0 function selection	-

Selecting Point No.0 and function of inputting user I/O CW start PCSTART1.

0 = Return to home position [Initial value]

1 = Point table operation

Set “0 = Return to home position”, the home position return starts.

Set “1 = Point table operation”, the operation of Point No.0 starts.

This parameter is used to start the home position return when there’s no home position input HOME in I/O.

No.	Name	Unit
647.0	Home position return Torque limit option	-

This is the safety function against the collision in home position return.

Enable/Disable Home position return Torque limit. Set the home position return torque limit value in Parameter No.656.0.

0 = Disable [Initial value]

1 = Enable

But, when selecting “Stopper” in base signal 1 for home position(No. 645. 0), it is not relevant to this setting. Torque limit value to the stopper is the Home position return Torque limit value(No. 656. 0).

No.	Name	Unit
647.1	Action at home position return completion	-

Select an action at home position return completion.

0 = No move [Initial value]

1 = Move

When selecting “No move”, after detecting the base signal for home position, deceleration to stop and home position return

completed.

When selecting “Move”, after detecting the base signal for home position, deceleration to stop and perform the positioning operation according to the parameter set.

No.	Name	Unit
648.0	Home position return Speed	rpm

Set Home position return Speed.

[Setting range] 1 to max. speed of the motor

[Initial value] 500

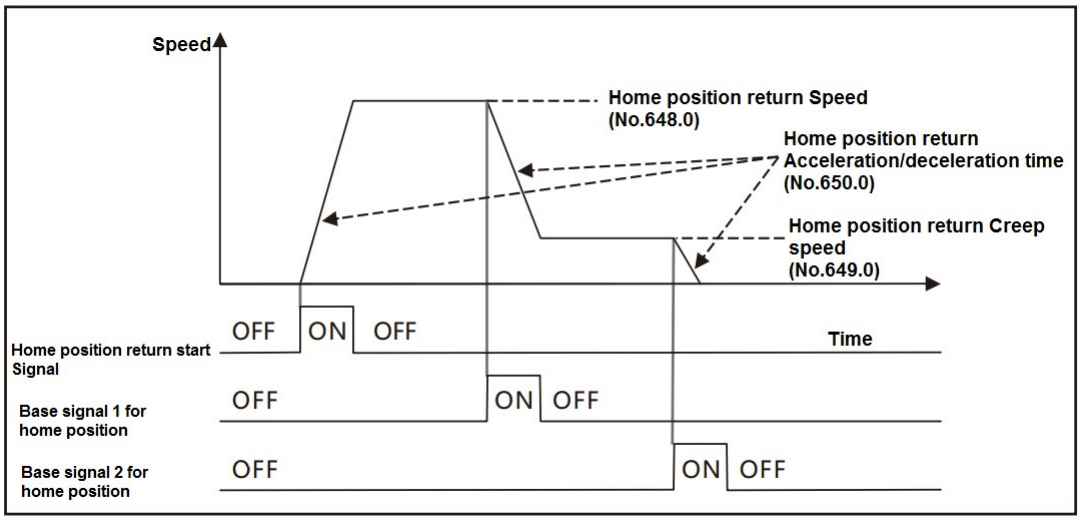

Figure 8.9.9 Home position return Speed

No.	Name	Unit
649.0	Home position return Creep speed	rpm

Set Creep speed after Home position Base signal 1 detection.

[Setting range] 1 to max. speed of the motor

[Initial value] 10

No.	Name	Unit
650.0	Home position return Acceleration/deceleration time	ms/1000rpm

Set Acceleration/Deceleration time for Home position return.

Set the acceleration time from speed 0 to 1000rpm and deceleration time from 1000 to 0rpm.

[Setting range] 0～5, 000

[Initial value] 30

No.	Name	Unit
651.0	Home position Return Shift-to-home-position quantity	Command unit(Note 1)

Set shift quantity from the position where the Base signal was detected to the home position.

In the situation except “1: Stopper” in home position base signal 1(No. 645. 0), the base signal begins to shift to the home position(No. 646. 0). The home position returns according to the shift quantity(No. 646. 0).

If “1: Stopper” in home position base signal 1 is set, the direction between shift-to-home-position and home position return(No. 646. 0) is opposite.

[Setting range] 0～1, 000, 000, 000

[Initial value]　0[command unit]

No.	Name	Unit

651.0	Home position return Home position data	Command unit(Note 1)

Set a position at the time of home position return complete.

When home position return is completed, change the setting value to ABS position feedback of home position return.

[Setting range] -1, 000, 000, 000～1, 000, 000, 000

[Initial value]　0 [command unit]

No.	Name	Unit
655.0	Home position return Press detection time	ms

Set the time from pressing the stopper to detecting the home position return.

This parameter is valid when the base signal 1 for home position (No.645. 0) is set to “Stopper”.

[Setting range] 5～1, 000

[Initial value] 100[ms]

No.	Name	Unit
656.0	Home position return Torque limit value	0.1%

Set Torque limit value at the time of home position return

This value is measured in terms of proportion to rated torque.

This value is the torque limit value of pressing the stopper when selecting ‘Stopper” in the base signal 1 for home position.

When selecting “Enable” in Home position return Torque limit option(No. 647. 0), this parameter is the safety measure against collision in home position return .

[Setting range] 10～3, 000

[Initial value] 500[0. 1％]

No.	Name	Unit
657.0	Home position return Phase Z invalidation distance	Command unit(Note 1)

Set a distance from the positon where Base signal 1 for home position is detected to the position where Phase Z detection starts.

[Setting range] 0～1, 000, 000, 000

[Initial value] 0[command unit]

No.	Name	Unit
659.0	Home position return Timeout Time	10ms

Set Home position return Timeout Time.

This parameter is valid when Home positon return Timeout option(No. 646. 2) is set to :Enable”.

[Setting range] 0～60, 000

[Initial value] 60, 000[10ms]

Note 1) The command unit can be got by 「command division and multiplication(numerator) (No. 34. 0) 」, 「command division and multiplication(denominator) (No. 36. 0) 」 and encoder unit.

$$[\text{Command unit}] = \frac{[\ \text{No.36.0}\ ]}{[\ \text{No.34.0}\ ]} \times [\ \text{Encoder unit}\ ]$$

The command unit can be got by the encoder unit 131, 072ppr.

For example, when the parameter No. 34. 0 is set to 32, 768, No. 36. 0 is set to 2, 500, the command unit will be 10, 000ppr.

When the ratio of command division and multiplication is 1 times or less, the speed of home position return cannot reach the speed set in home position return(No. 648. 0) and home position return creep speed (No. 649. 0).

8.9.5 User I/O description

■Input

On when connected to COM- at closed-circuit; OFF when connected to COM- at open-circuit.

1）PCSTART1 CW start（6 pins）

・Use PCSTART1(6 pins) to start home position return

・Specify “0” to the Point No. in PCSEL1. . . 4 in user I/O, the PCSTART1 changes from open-circuit to closed-circuit to start the home position return.

2) PCSEL1. . . 4 point No. selection（7～10 pins）

・Set 「Point No.0 function selection」 (No. 646. 3) to “0: home position return”.

・When perform the home position return by PCSTART1, specify “0” to the Point No. in PCSEL1. . . 4 in user I/O.

Items	User I/O Signal name	I/O status		
Point No. selection	PCSEL1...4	Input	—	—
CW start	PCSTART1	Input	ON OFF	C O

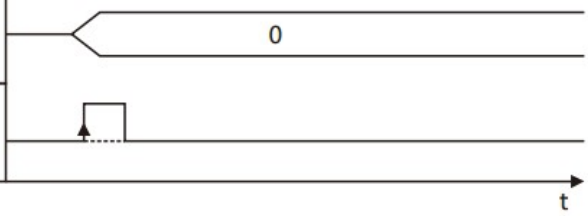

Note: C:contact closed-circuit, O: contact open-circuit

Figure 8.9.10 The start of home position return（PCSTART1）

3) Home position return start (Valid when positioner I/O is set to Item 1).

・This parameter is valid when positioner I/O is set to Item 1.

(For the setting of Item 1, refer to「Appendix 3 SV-E3 special I/O setting」）

・The home position return starts from HOME open to close

Items	User I/O Signal name	I/O status		
Home position return start	HOME	Input	ON OFF	C O

Note: C:contact closed-circuit, O: contact open-circuit

Figure 8.9.11 The start of home position return（HOME）

4) ORG home position sensor (11 pins)

・Enter the home position sensor signal when have the home position return by home position sensor.

・Have the setting as below:

「Base signal 1 selection for Home position」（No. 645. 0）: 2 = Home position DOG frond end

「Home position sensor input polarity」（No. 646. 1）: (Either polarity is Ok)

The initial setting of home position sensor input polarity is the home position sensor signal when connected with COM- from ON to OFF.

■Output

On when connected to COM- at closed-circuit; OFF when connected to COM- at open-circuit.

1) HEND home position return completion (16 pins) (Note 1)

・Change to be ON at home position return completion. When “Absolute system” is selected for “Selection of an encoder system” (No. 257. 0), there is no need to have the home position return when power ON the drive next time after the home position return has been completed.

・HEND will be OFF in the following situation:

a) In the process of home position return

b) Interrupted before HEND becomes ON in the home position return

The home position return interrupts in the following situations;

○Make the servo OFF in the home position return with the operation

○Perform the deviation counter clearing in the home position return with the operation

○Input the drive restriction and perform the deviation counter clearing in the home position return with the operation

○Alarms occur and servo OFF in the home position return with the operation

c) “Incremental system” is selected to “Selection of an encoder system” after the power is supplied to the drive

d) “Absolute system” is selected for “Selection of an encoder system”, but the multi-rotation data of the encoder disappear.

・The minimum OFF time of the signal is 3ms.

2) MEND completion (15 pins)(Note 1)

・When perform the home position return at servo ON, confirm if you can start the home position return or not. Please make sure this signal is ON before home position return.

・OFF at servo OFF.

・The minimum OFF time of the signal is 3ms.

3) MEND/T-LIMIT completion / torque limit (Valid when positioner I/O is set to Item 1).

・This parameter is valid when positioner I/O is set to Item 1.

(For the setting of Item 1, refer to「Appendix 3 SV-E3 special I/O setting」)

・Be ON either MEND or T-LIMIT is ON.

・This signal, used in the device of torque limit, including stopper, is T-LIMIT. And the other operations is used as MEND signal. As T-LIMIT, the torque limit TLSEL1 is ON and as MEND, TLSEL1 is OFF.

Set the following parameters first when using this signal.

“Torque command limit override selection”(No. 144. 0): “1: Enable”

“Selection of Torque limit state output mode(No. 144. 1)”: “2 : Torque command limit Override 2”

Note 1) Action at home position return completion(No. 647. 1）: HEND and MEND

1) When set the Action at home position return completion(No. 647. 1） to “1 = Move”

After the base signal for home position is detected, it will decelerate to stop and HEND is ON at home position return completion.

Then shift to home position according to the action of home position return completion, the MEND becomes ON after the operation has been completed. The ABS position command becomes the home position return position data after the operation has been completed.

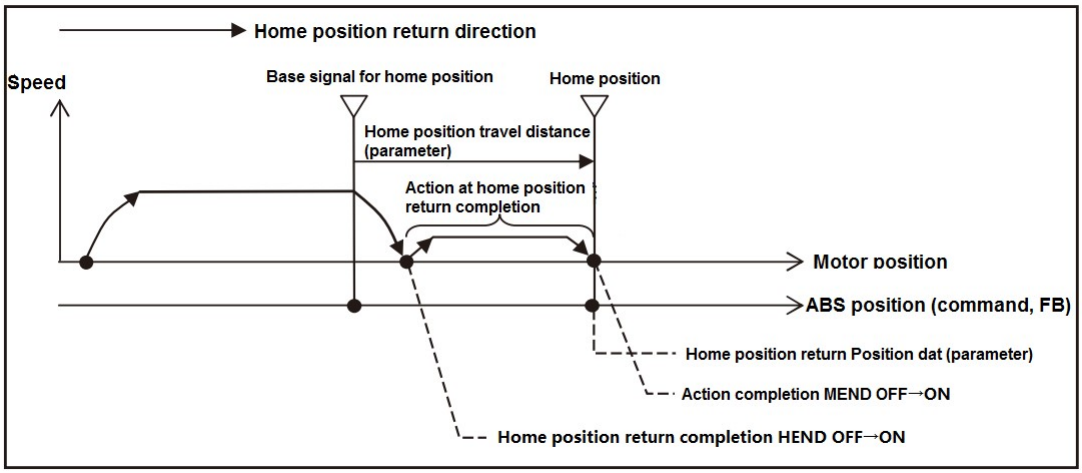

Figure8.9.12 Action at home position return completion(when the setting is valid)

2) When set the Action at home position return completion(No. 647. 1） to “0= No move”

After the base signal for home position is detected, it will decelerate to stop and HEND is ON at home position return completion.

Then do not shift to the home position return. The action will be completed at the position of deceleration stop and output MEND to be ON.

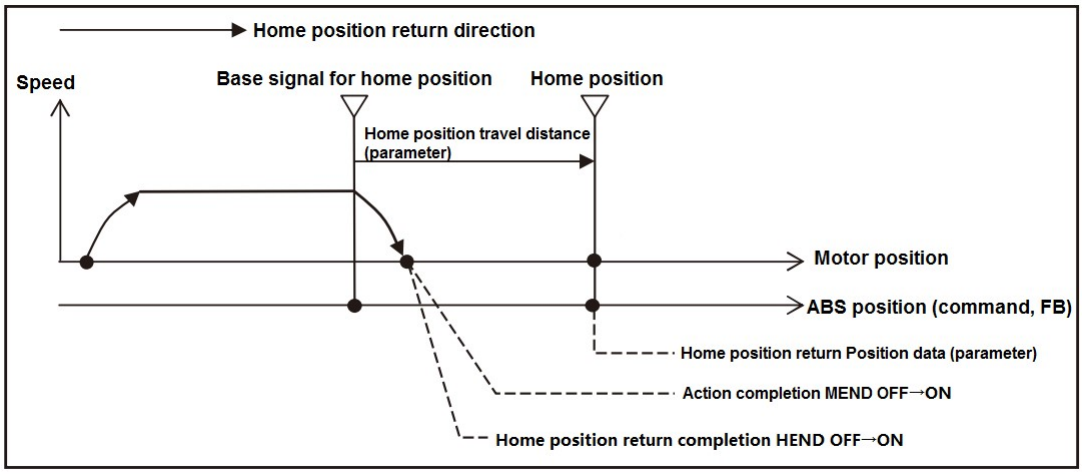

Figure8.9.13 Action at home position return completion(when the setting is invalid)

Note2) But, in the following situation, the torque limit value of home position return is applicable for「Home position return Torque limit value（No.656.0）」.

1) Set「Base signal 1 selection for Home position (No.645.0）」to “1(stopper)”.

2) Set「Home position return Torque limit option (No.647.0）」to “1(Enable)”.

8.9.6 Precautions

1) Install a home position sensor to the machinery when use the Home position DOG front end as the base signal for home position. Besides, set the “home position return direction”(No. 646. 0) from home position DOG sensor front end to home position DOG front end. There is the danger of collision for the machinery if the home position direction is far away from the home position sensor.

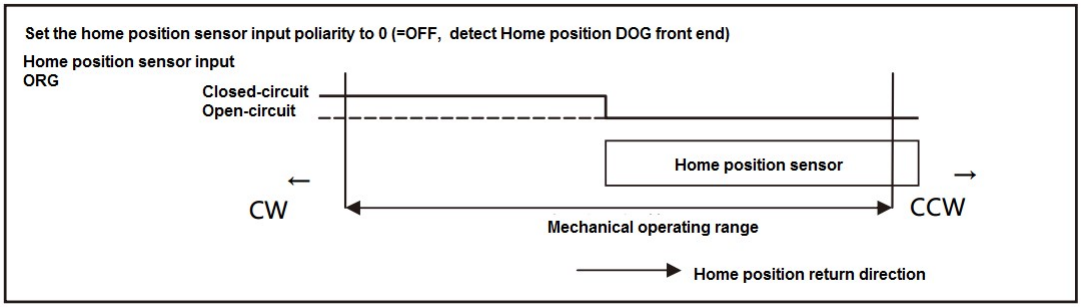

2) Please save the parameters after changing the command division and multiplication. Perform the home position return operation again after power ON next time.

3) When home position return with Encoder phase Z, do not design it to the start position of phase Z detection or near the motor phase Z. Phase Z detection position sometimes changes. The phase Z position can be confirmed at the position where the status value of “Encoder 1 rotation angle data” is 0.

4) The home position return will be interrupted and become uncompleted in the following situations at the home position return with operation.

■Servo OFF

■Deviation counter clearing

When performing the deviation counter clearing, it will emergency stop.

■Input the drive restriction, then perform the deviation counter clearing.

5) Set the 「Selection of Auto interpolation for command division and multiplication」(No. 32. 2) to “1: Enable”. The initial value is “1: Enable”. The speed can change rapidly if set it to “0:Disable”.

8.9.7 Precautions

The operation of home position return can be done by user I/O input.

1) By the method of user I/O input

①Set the parameters in table 8.9.1

②Start the home position return in the following method

・After specify Point No. 0 to the PCSEL1. . . 4, input PCSTART1.

・Input HOME when select I/O setting of Item1

For details, refer to “section 8.9.5 User I/O description”.

Points: Generally, the home position return can start after confirming MEND is close（ON） at servo ON. The home position return cannot start when the MEND is open(OFF) at servo ON.

Table 8.9.1 Parameters of home position return by user I/O

No.	Parameter	Setting value	Description
2. 0	Control mode selection	0	Position control mode
3. 0	Command mode selection	3	Internal generation command
9. 0	Selection of Operation mode	0	I/O
642. 0	Internal speed command - Operation mode	0	Point Table

Note 1) Selection of Operation mode selects “I/O” when power ON the drive. This cannot be set by the set panel.

■Timing chart

The operation procedures of home position return with home position sensor front end are shown below.

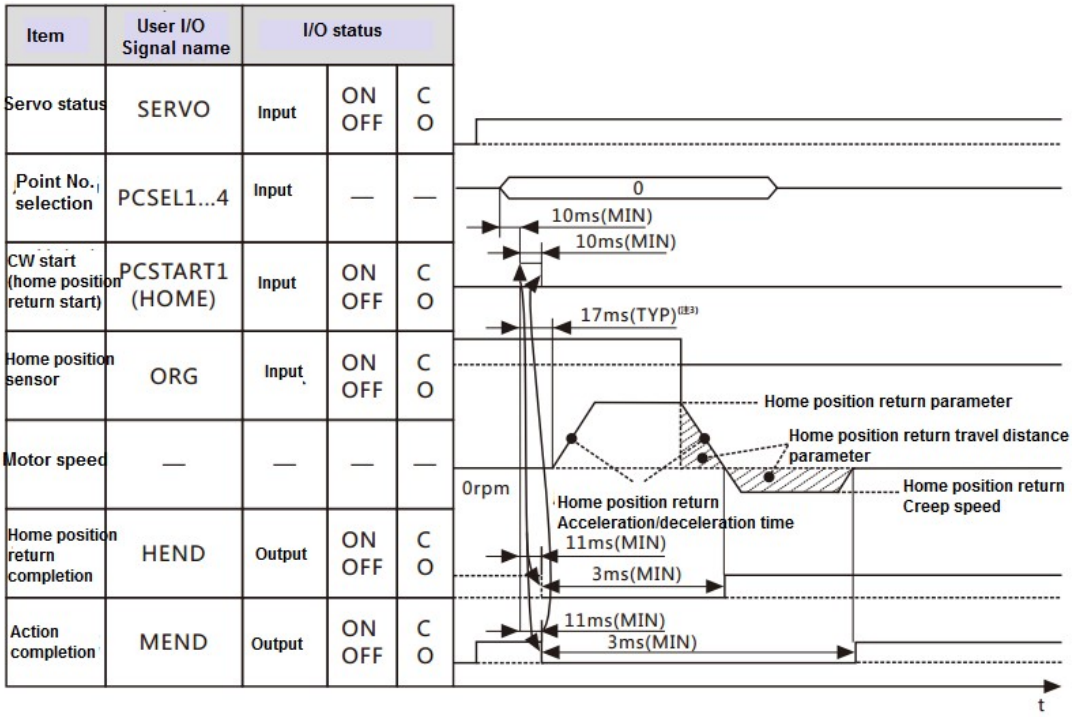

Figure 8.9.15 Timing chart (home position return at servo ON)

Note 1) When the User I/O output the MEND of MEND/T-LIMIT action completion, make the T-LIMIT output OFF by setting the parameters and TLSEL1（OFF）. For details, refer t section 8.9.5 User I/O description.

Note 2) Timing chart with no I/O input. The start will delay if vibration occurs.

Note 3) The start time varies from the different conditions.

Table 8.9.2 Operation procedures for home position return at servo ON

No.	Items	Description
1	Parameter setting for home position return	Set the parameter of home position return speed, home position return creep speed, home position return acceleration/deceleration time.
2	Confirm the start of home position return	Make sure MEND is in closed-circuit state, standby in the open-circuit state.
3	Specify Point No.	After PCSEL1. . . 4 is open-circuit, specify points NO. 0. No need when start the home position return by HOME.
4	Start of home position return	After 10ms when input PCSEL1. . 4, change the PCSTART1 or HOME from the open-circuit to closed-circuit.
5	Confirmation of command execution	Open-circuit from standby to MEND. If open-circuit, make the PCSTART or HOME to the open-circuit.
6	Confirmation of action completion	Confirm the action completion by MEND. When the MEND changes from open-circuit to closed-circuit, the action completed.
7	Confirmation of home position return completion	After action completion, confirm the home position return completion by HEND. When the HEND is closed-circuit, the home position return completed.

8.9.7 Detailed description for home position return

A) Home position return with arbitrary position

Home position return with the current position or Encoder phase Z near the current position.

■ Parameters

Table 8.9.4 Parameters of home position return with arbitrary position

No.	**Parameter**	**Setting**
645. 0	Base signal 1 selection for Home position	Set “0 = Arbitrary position”
645. 1	Base signal 2 selection for Home position	Set the Encoder phase Z to the base signal for home position
646. 0	Home position return direction	Set the direction for home position travel distance and Encoder phase Z
647. 1	Action at home position return completion	Selection of shifting to home position after detecting base signal for home position
649. 0	Home position return Creep speed	Set the speed after Encoder phase Z detection and home position return completion
650. 0	Home position return Acceleration/Deceleration time	Set Acceleration/Deceleration time for Home position return
651. 0	Home position Return Shift-to-home-position quantity	Set shift quantity from the position where the Base signal was detected to the home position
653. 0	Home position return Home position data	Set a position at the time of home position return complete
657. 0	Home position return Phase Z invalidation distance	Set a distance from the positon where Base signal 1 for home position is detected to the position where Phase Z detection starts. This parameter is needed when NO.645.1 =1

Table 8.9.5 Example for Parameters of home position return with arbitrary position

No.	Parameter name	Setting description
646. 0	Home position return direction	0=CCW
647. 1	Action at home position return completion	1=Move

1) When not to use Encoder phase Z

Set “Base signal 2 selection for Home position” to “0=None”.

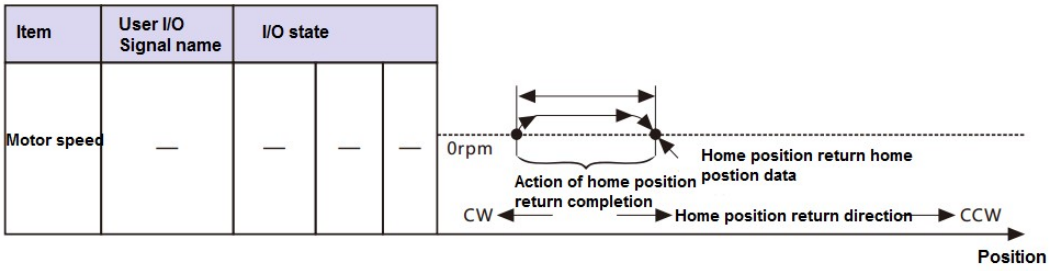

Figure 8.9.18 Overview diagram with horizontal axis(home position return with arbitrary position)

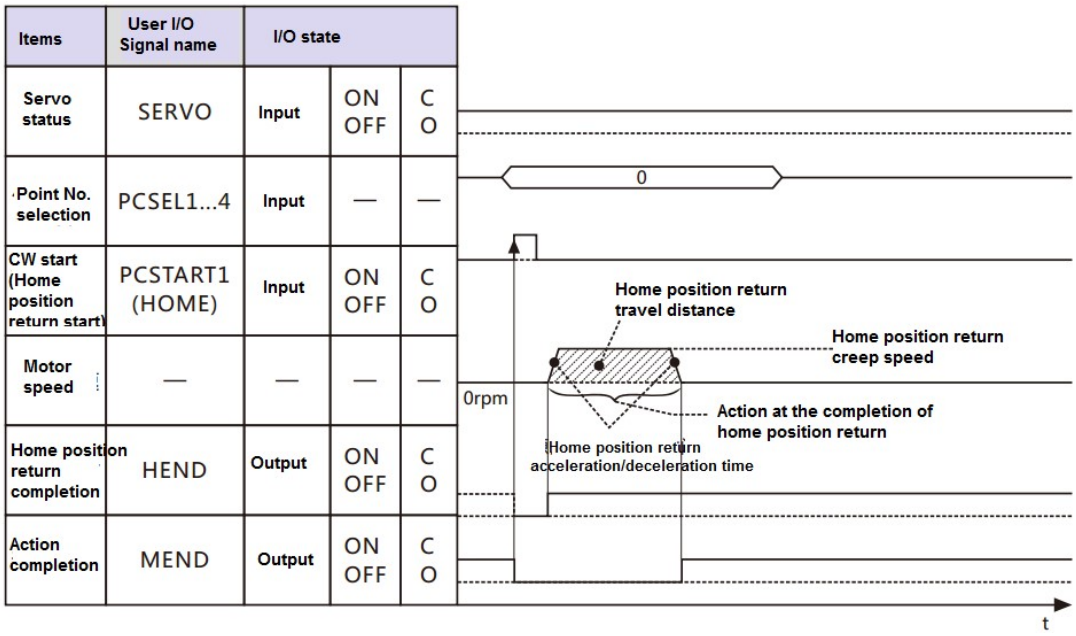

Note) I/O state: “C” indicates the closed-circuit for internal output circuit contact or external contact.

“O” indicates open-circuit.

Figure 8.9.19 Timing chart ((home position return with arbitrary position)

・When set the Action at home position return completion(No. 647. 1) to “No move”, it will not shift to the home position and end the action.

2) When use Encoder phase Z

Set “Base signal 2 selection for Home position” to “1=Encoder phase Z”.

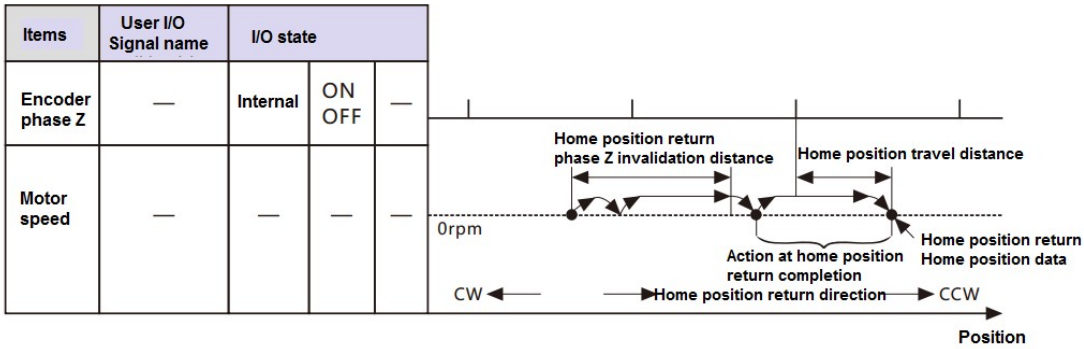

Figure 8.9.20 Overview diagram with horizontal axis(home position return with arbitrary position, encoder phase Z)

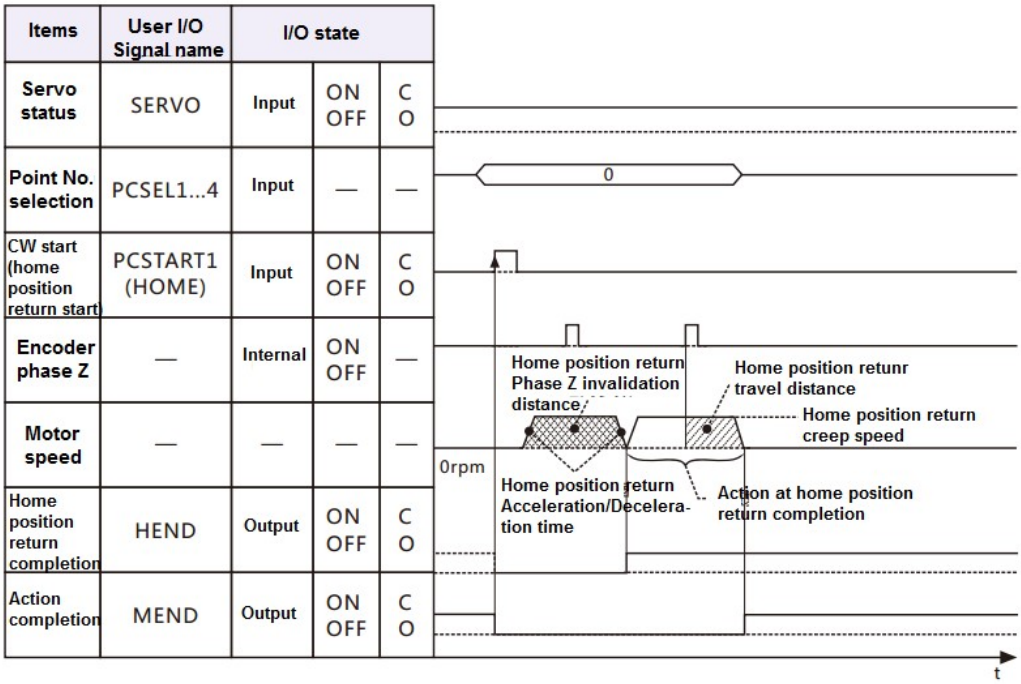

Note)) I/O state: “C” indicates the closed-circuit for internal output circuit contact or external contact.

“O” indicates open-circuit.

Figure 8.9.21 Timing chart ((home position return with arbitrary position, Encoder phase Z)

・When set the Action at home position return completion(No. 647. 1) to “No move”, it will not shift to the home position and end the action.

3) Home position return at servo OFF

The home position return with Move must be done at servo ON. But if meet the following conditions, the home position return can be done at servo OFF.

Table 8.9.6

No.	Parameter	Setting value
645. 0	Base signal 1 selection for Home position	0 = Arbitrary position
647. 1	Action at home position return completion	0 = No move
657. 0	Home position return Phase Z invalidation distance	0

B) Home position return with Stopper

Home position return with the stopper or Encoder phase Z near the stopper.

■ Parameters

Table 8.9.7 Parameters for home position return with stopper

No.	Parameters	Setting
645. 0	Base signal 1 selection for Home position	Set to “1 = Stopper”
645. 1	Base signal 2 selection for Home position	Set the Encoder phase Z to the base signal for home position after detecting Base signal 1
646. 0	Home position return direction	Set the direction of detecting stopper
647. 1	Action at home position return completion	Selection of shifting to home position after detecting base signal for home position
648. 0	Home position return Speed	Set the speed before press the stopper
649. 0	Home position return Creep speed	Set the speed after press the stopper
650. 0	Home position return Acceleration/Deceleration time	Set Acceleration/Deceleration time for Home position return
651. 0	Home position Return Shift-to-home-position quantity	Set shift quantity from the position where the Base signal was detected to the home position
653. 0	Home position return Home position data	Set a position at the time of home position return complete
655. 0	Home position return Press detection time	Set the time at the time of press home position return
656. 0	Home position return Torque limit value	Set Torque limit value at the time of home position return
657. 0	Home position return Phase Z invalidation distance	Set a distance from the positon where Base signal 1 for home position is detected to the position where Phase Z detection starts. This parameter is needed when NO.645.1 =1

Table 8.9.8 Parameter setting for home position return with stopper

No.	Parameter	Setting value
646. 0	Home position return direction	0 = CCW direction
647. 1	Action at home position return completion	1 = Move

1) When not to use Encoder phase Z

Set “Base signal 2 selection for Home position” to “0=None”.

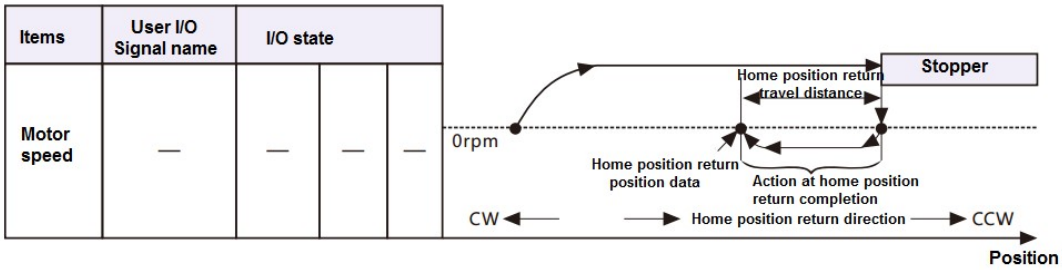

Figure 8.9.22 Overview diagram with horizontal axis(home position return with stopper)

Items	User I/O Signal name	I/O state		
Servo status	SERVO	Input	ON OFF	C O
Point No. selection	PCSEL1...4	Input	—	—
CW start (home position return start)	PCSTART1 (HOME)	Input	ON OFF	C O
Motor speed	—	—	—	—
Torque limit value	—	Internal	—	—
Torque limit status	—	Internal	ON OFF	—
Home position return completion	HEND	Output	ON OFF	C O
Action completion	MEND	Output	ON OFF	C O

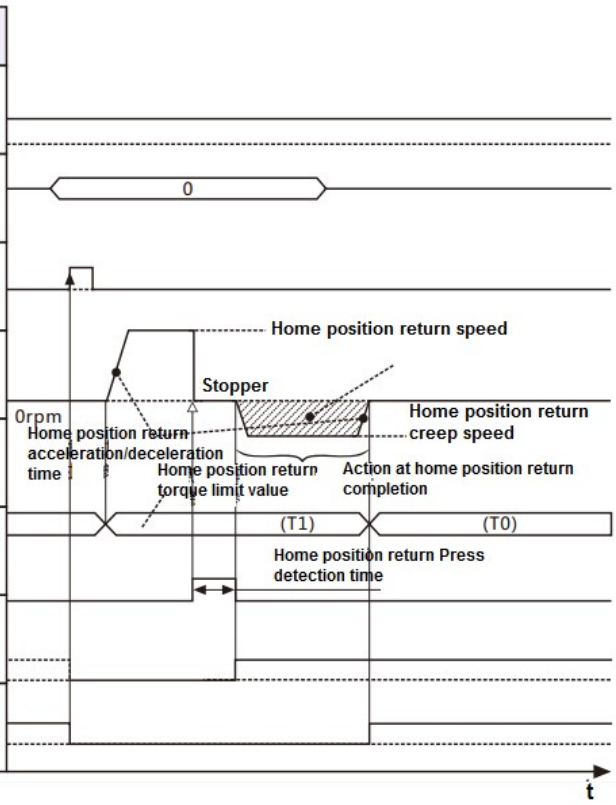

Note)) I/O state: “C” indicates the closed-circuit for internal output circuit contact or external contact.

“O” indicates open-circuit.

Figure 8.9.23 Timing chart ((home position return with stopper)

・When set the Action at home position return completion(No. 647. 1) to “No move”, it will not shift to the home position and end the action.

・Torque limit value(T0) returns to the normal setting after home position returns complete.

・The torque limit value from home position return starts to pressing detection time completion is the torque limit value of home position return(No. 647. 0).

・The torque limit value(T1) from home position return pressing detection time completion to home position return completion is the torque limit value for home position return when set the Home position return Torque limit option(No. 647. 0) to “1=Enable”. If set to “0 = Disable”, the toque limit value will return to the normal setting.

・The home position return completed when confirm the position according to the stop position from outputting torque limit to pressing detection time (No. 655. 0).

2) When use Encoder phase Z

Set “Base signal 2 selection for Home position” to “1=Encoder phase Z”.

Items	User I/O Signal name	I/O state		
Encoder phase Z	—	Internal	ON OFF	—
Motor speed	—	—	—	—

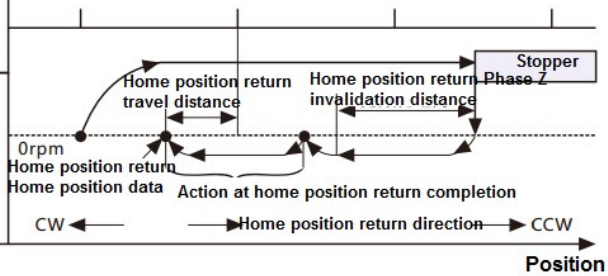

Figure 8.9.24 Overview diagram with horizontal axis(home position return with stopper and encoder phase Z)

Items	User I/O Signal name	I/O state		
Servo status	SERVO	Input	ON OFF	C O
Point No. selection	PCSEL1...4	Input	—	—
CW start (home position return start)	PCSTART1 (HOME)	Input	ON OFF	C O
Encoder phase Z	—	Internal	ON OFF	—
Motor speed	—	—	—	—
Torque limit value	—	(Internal)	—	—
Torque limit statuss	—	(Internal)	ON OFF	—
Home position return completion	HEND	Output	ON OFF	C O
Action completion	MEND	Output	ON OFF	C O

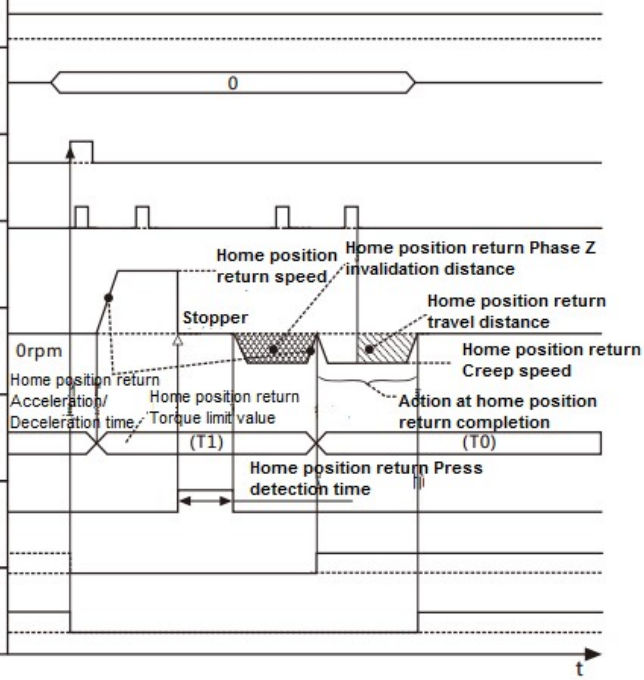

Note)) I/O state: “C” indicates the closed-circuit for internal output circuit contact or external contact.

“O” indicates open-circuit.

Figure 8.9.25 Timing chart ((home position return with stopper and encoder phase Z)

・When set the Action at home position return completion(No. 647. 1) to “No move”, it will not shift to the home position and end the action.

・Torque limit value(T0) returns to the normal setting after home position returns complete.

・The torque limit value from home position return starts to pressing detection time completion is the torque limit value of home position return(No. 647. 0).

・The torque limit value(T1) from home position return pressing detection time completion to home position return completion is the torque limit value for home position return when set the Home position return Torque limit option(No. 647. 0) to “1=Enable”. If set to “0 = Disable”, the toque limit value will return to the normal setting.

・The home position return completed when confirm the position according to the stop position from outputting torque limit to pressing detection time (No. 655. 0).

C) Home position return with Home position DOG front end

Home position return with the Home position DOG front end or Encoder phase Z near the Home position DOG front end.

■ Parameters

Table 8.9.9 Parameters for home position return with Home position DOG front end

No.	Parameters	Setting
645. 0	Base signal 1 selection for Home position	Set to “2 = Home position DOG front end”
645. 1	Base signal 2 selection for Home position	Set the Encoder phase Z to the base signal for home position after detecting Base signal 1
643. 0	Home position Base signal 1 redetection	Redetection of home position return creep speed after home position return speed detecting home position DOG front end
646. 0	Home position return direction	Set the direction of Home position DOG front end from home position sensor front end
646. 1	Home position sensor input polarity	Set Home position sensor input polarity
647. 1	Action at home position return completion	Selection of shifting to home position after detecting base signal for home position
648. 0	Home position return Speed	Set the speed before detecting home position DOG front end
649. 0	Home position return Creep speed	Set the speed after detecting home position DOG front end
650. 0	Home position return Acceleration/Deceleration time	Set Acceleration/Deceleration time for Home position return
651. 0	Home position Return Shift-to-home-position quantity	Set shift quantity from the position where the Base signal was detected to the home position
653. 0	Home position return Home position data	Set a position at the time of home position return complete
657. 0	Home position return Phase Z invalidation distance	Set a distance from the positon where Base signal 1 for home position is detected to the position where Phase Z detection starts. This parameter is needed when NO.645.1 =1

Table 8.9.10 Parameter setting for home position return with Home position DOG front end

No.	Parameter	Setting value
643. 0	Home position Base signal 1 redetection	1=Enable
646. 0	Home position return direction	0 = CCW direction
646. 1	Home position sensor input polarity	0 = When OFF, detect Home position dog front end
647. 1	Action at home position return completion	1 = Move

1) When not to use Encoder phase Z

Set “Base signal 2 selection for Home position” to “0=None”.

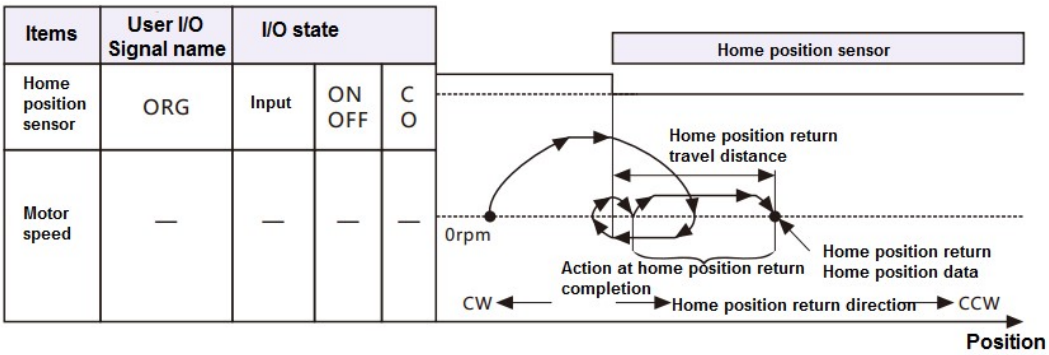

Figure 8.9.26 Overview diagram with horizontal axis(home position return with Home position DOG front end)

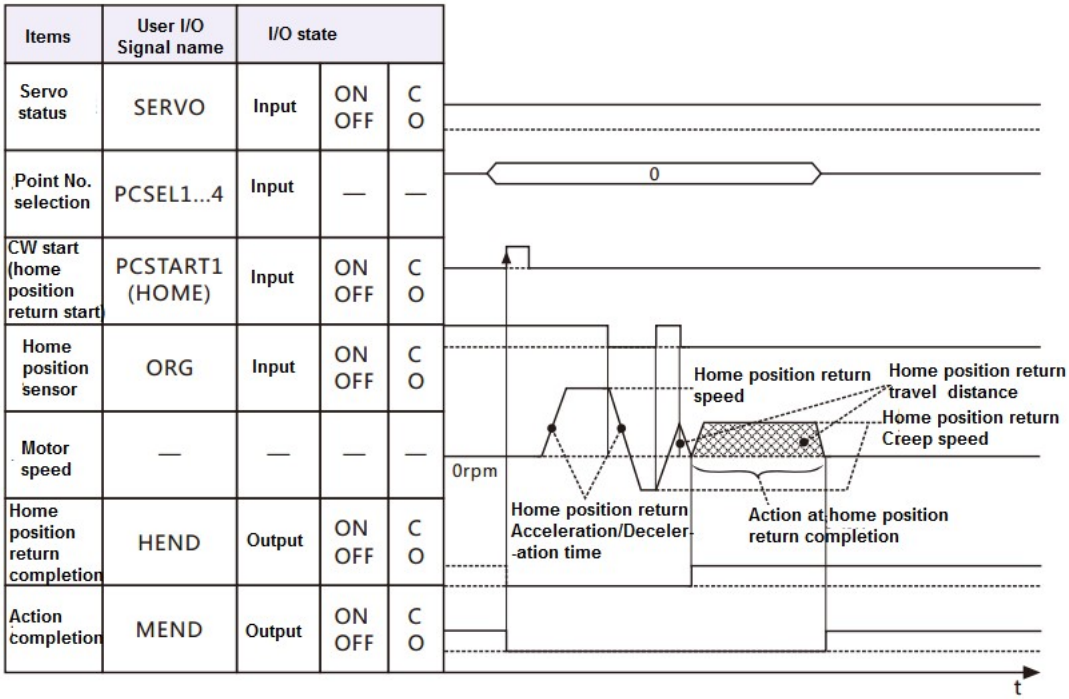

Note)) I/O state: “C” indicates the closed-circuit for internal output circuit contact or external contact.

“O” indicates open-circuit.

Figure 8.9.27 Timing chart ((home position return with Home position DOG front end)

・When set the Action at home position return completion(No. 647. 1) to “No move”, it will not shift to the home position and end the action.

・When set Home position Base signal 1 redetection (No. 645. 3) to “Disable”, no backward action for detecting home position DOG front end.

・When start the home position return on the home position sensor, it will be back to home position DOG sensor front end and have the home position DOG front end detection with home position return creep speed.

2) When use Encoder phase Z

Set “Base signal 2 selection for Home position” to “1=Encoder phase Z”.

Items	User I/O Signal name	I/O state		
Home position sensor	ORG	Input	ON OFF	C O
Encoder phase Z	—	Internal	ON OFF	—
Motor speed	—	—	—	—

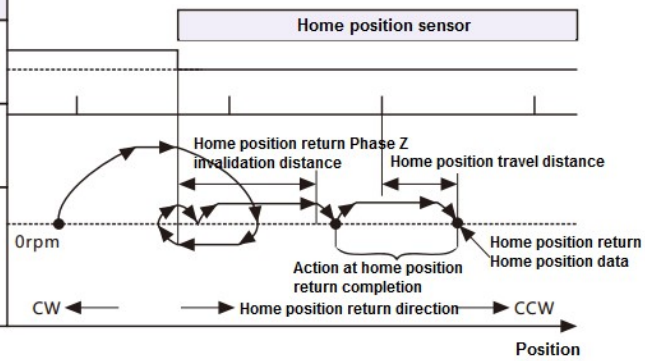

Figure 8.9.28 Overview diagram with horizontal axis(home position return with Home position DOG front end and phase Z)

Items	User I/O Signal name	I/O state		
Servo status	SERVO	Input	ON OFF	C O
Point No. selection	PCSEL1...4	Input	—	—
CW start (home position return start)	PCSTART1 (HOME)	Input	ON OFF	C O
Home position sensor	ORG	Input	ON OFF	C O
Encoder phase Z	—	Internal	ON OFF	—
Motor speed	—	—	—	—
Home position return completion	HEND	Output	ON OFF	C O
Action completion	MEND	Output	ON OFF	C O

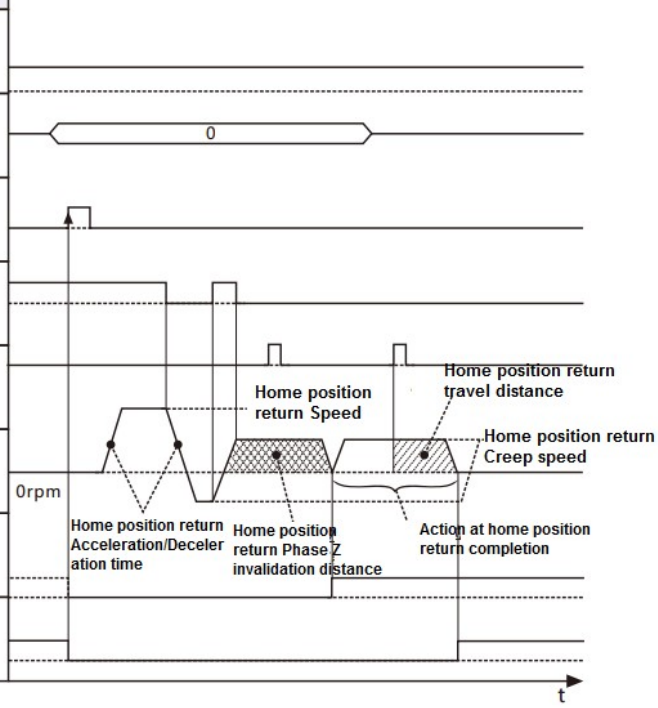

Note)) I/O state: “C” indicates the closed-circuit for internal output circuit contact or external contact.

“O” indicates open-circuit.

Figure 8.9.29 Timing chart ((home position return with Home position DOG front end and phase Z)

・When set the Action at home position return completion(No. 647. 1) to “No move”, it will not shift to the home position and end the action.

・When set Home position Base signal 1 redetection (No. 645. 3) to “Disable”, no backward action for detecting home position DOG front end.

・When start the home position return on the home position sensor, it will be back to home position DOG sensor front end and have the home position DOG front end detection with home position return creep speed.

3) About the exit of home position DOG sensor

Set the「Base signal 1 selection for Home position(No. 645. 0) 」 to “2 = Home position DOG front end”.

When the start point of home position return is on the home position DOG sensor, back to the position where the home position return can proceed to start the home position return. Take it as the example with “set「Base signal 2 selection for Home position(No. 645. 1）」to “1 = Encoder Phase Z”.

No matter how to set 「Home position Base signal 1 redetection(No. 645. 3）」, it will back and perform the creep operation. Move in the opposite direction of the home position return and exit from the home position DOG sensor, CCW, and move at the home position creep speed. Redetect the home position DOG front end.

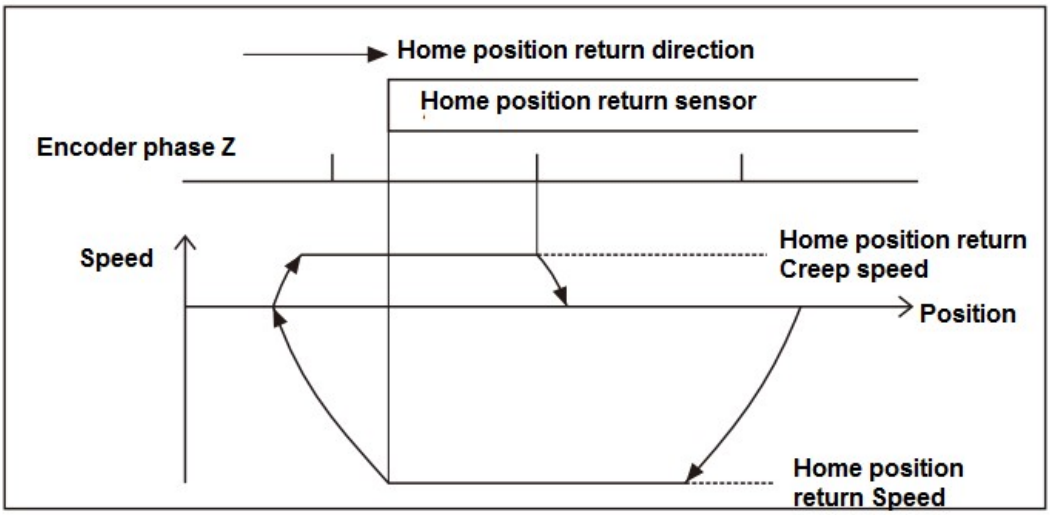

Figure 8.9.30 Exit of home position DOG sensor(The setting of the “Home position Base signal 1 redetection” is invalid)

9. Troubleshooting and countermeasures

9.1 Alarm display

When the alarm occurs, the alarm description can be confirmed according to the alarm code on the panel of servo drive. The alarm code and alarm description are shown in the 「Warning list」.

If you want to consult with HNC ELECTRIC Corporation, make a record of the alarm and contact with us.

9.2 Alarm handling and alarm reset

For alarm handling and resetting, please refer to “Warning List”. There are three ways for alarm reset. It varies according to different alarm items.

① The host control device sends reset clear signal (RESET of CN1 5pin)to the drive..

② Restart drive control power supply.

③ Press SHIFT+UP at the same time.

Table 9.2.1

No.	Alarm	Description	Handling ways	Reset method
0	System alarm	Control circuit error ・CPU in control circuit cannot work normally.	Consult HCFA distributors.	Restart control power supply
1	EEPROM data error	・Parameter writing error	After confirming cables, rewrite the parameters.	Reset
2	Model code error	The model code cannot be read normally.	・Check the combination of motor and drive.	Restart control

		・The combination of motor and drive is incorrect. ・The encoder cable does not connect to the drive correctly.(including disconnect).	・Please Check the encoder cable.	power supply
4	Overspeed error	・Motor rotates exceeding the max. speed ・ Inappropriate command from upper controller ・ Accumulated pulses maybe caused by 「drive restriction」	・Please adjust the parameters. ・Check the command ・Check if the limit sensor position changes.	Reset
5	Speed deviation error	Position control and speed control error ・Inappropriate command ・ Overload, cannot catch up with the command speed ・ Speed deviation error detection value(No.90.0) is incorrect	・Check the command from the upper controller ・Adjust gain parameter ・Check the setting value of Speed deviation error detection value(No.90.0). ・Check if the brake has been released ・Check whether the torque limit operates or not	Reset
6	Position deviation error	Position control error ・The acceleration time is too short ・The power cable or encoder cable wiring error or disconnect ・ Position deviation error Detection value (No.87.0) is incorrect	・Adjust gain parameter ・Check the command from the upper controller ・Check the wiring ・Check the setting value of Position deviation error Detection value (No.87.0) ・Check if the brake has been released ・Check whether the torque limit operates or not	Reset
7	Overload error	Position control error after operation starts: 1. The motor does not operate 2. Motor operates for a short time 3.Alarm occurs after operation starts In operating 4.In operating, alarm occurs at the same period The acceleration time is too short or no acceleration. (bump into other objects) 5,Motor capacity is too small /too heavy load 6. Excessive vibration 7.Control gain or command not correct(CCW rapidly) 8.Noise occurs	Continuous operation can cause overload or burn the motor. 1&2.・Check the motor power cable wiring 3. ・Check the selected motor capacity ・Check if the brake has been released ・Check the reduction ratio 4. ・Check the acceleration time, torque waveform , load rate [in acceleration] ・Check there are no obstacles to the driving range [Outside the acceleration] 5. ・Check the torque waveform and load rate ・Check the inertia ratio →Install the reducer to improve the motor capacity 6&7.・Adjust gain parameter ・Check if there are rapid CCW in command ・Use command smoothing filter 8. ・Use notch filter and low-pass filter to suppress the noise	Reset
8	Command overspeed error	Position control error ・Position command input exceed max. speed ・The command from upper controller is inappropriate.	・Check Command division and multiplication (No.34.0、No.36.0) ・Check the command from upper controller	Reset

9	Encoder pulse output frequency error	・Encoder pulse output frequency exceeds 4Mpps	・Check the value of Encoder pulse output Division and multiplication(No.276.0, No.278.0) ・Check the encoder pulse output frequency upper limit value(No.285.0) and error detection delay time (No.286.0)	Restart control power supply
10	Internal positon command overflow error/ home position return failure	・Internal position command outside the range （±1,073,741,823） ・Travel distance of the command outside the range （±2,147,483,647） ・Home position return failure or timeout	・Adjust the overflow detection (No.643.0) ・Adjust the travel distance ・Adjust the parameters for home position return	Reset
11	Encoder error (multi-rotation counter overflow)	・Multi-rotation data of the encoder outside the range of ±32,767	・Check the setting in Selection of an encoder system(No.257.0) ・Make sure the multi-rotation travel distance is within ±32,767	Restart control power supply
12	Overheat error	・Temperature of control circuit exceeds the upper limit	・Check the setting and environment of the drive ・The ambient temperature of drive should be in accordance with 「Installation direction and clearances」	Reset
14	Overvoltage error	・Main circuit voltage exceeds the upper limit of drive circuit	Only under the occasion of deceleration ・Confirm the regenerative resistor warning on the setting panel and install the regenerative resistor if necessary. ・Check the operation mode of command ・Use filter to slow down the deceleration Not only for the occasion of deceleration ・Check whether the main circuit voltage is outside the specified range ・Check if the voltage changes when driven	Reset
15	Power supply error (main circuit power)	Main circuit voltage too high or too low ・Do not enter the main circuit power ・Main circuit power outside the specified range ・Main circuit voltage change outside the specified range ・Input SVON signal without main circuit power Action time of regenerative control circuit outside the specified range ・Continuous regeneration ON	Under the occasion from servo ON to start operating ・Check the main circuit power to the drive ・Check the main circuit power voltage ・Check the timing of main circuit power ON and SVON signal input Under the occasion of operating ・Check if the voltage changes by the overall operation of the device. And use the sufficient power supply to avoid the voltage changes. Under the occasion of deceleration ・Confirm the regenerative resistor warning on the setting panel and install the regenerative resistor if necessary. ・Check the operation mode of command ・Use filter to slow down the deceleration	Reset
16	Encoder error	・Encoder data changes sharply in a short	・Check if there's the wire breakage or pins off	Restart control

	(data receive)	time	·Use the cable at a length of less than 20m ·Check the disturbance by the noise -Use shielded twisted pair cable -Separate encoder cable from the power cable -Connect FG -Install a filter ring to the power cable and encoder cable ·Consult HCFA distributor if have not been improved	power supply
17	Encoder error (No response)	·Encoder communication interrupts		
19	Encoder error (communication)	·Cannot communicate with the encoder		
20	Encoder error (Multi-revolution data)	·Multi-revolution data of the absolute encoder changes sharply in a short time ·Multi-revolution data of the encoder cannot receive the communication		
18	Encoder error(circuit)	· The battery voltage of absolute encoder drops or battery removed (Alarm of items 21 occurs) · Outside the specification and temperature range of encoder, the output data error ·Encoder itself error	When use absolute system ·Change the battery and initialize the encoder When using absolute system When not use absolute system ·Check if outside the specification and temperature range of encoder, ·Consult HCFA distributor if have not been improved	Restart control power supply and encoder clearing
21	Encoder error (voltage drops)	·Battery voltage is too low ·Battery drops · When the battery is connected for the first time	·Check if the battery voltage drops ·Check if the battery and cable removed ·Initialize the encoder	Restart control power supply and encoder clearing
22	Power supply error (control power)	·Voltage of control power drops	·Check the control power voltage ·Check the power capacity · Check the 24V（1pin,2pin）wiring of user I/O connector Alarm No.15(power error) or other alarms may occur simultaneously. Please check all the alarms.	Reset
23	Switching circuit error	·Control circuit error	·Consult HCFA distributor	Reset
24	Overcurrent error	·Motor current error detected by drive	·Check the motor power cable -Grounding or not -Power cable wiring ·Check the control gain and operation mode -Increase acceleration/deceleration time -Set the command smoothing filter ((No.66.0, No.66.1, No.80.0,No.81.0) ·Release the brake and stopper to make the motor operate ·Check the encoder cable -Wiring(bad contact) -Use shielded twisted pair cable ·Consult HCFA distributor if have not been improved	Reset
25	Inverter error 1	·Control circuit error	·Check the motor power cable -Grounding or not	Reset
26	Inverter error 2	·Control circuit error		

		・Servo ON timeout	-Power cable wiring ・Consult HCFA distributor if have not been improved	
27	Current sensor error	・Ambient temperature of current sensor is too high ・Current sensor error	・Check the setting and temperature of the drive ・Consult HCFA distributor if have not been improved	Reset
29	Power error (Inside the drive)	・Control power supply (DC5V) voltage drops in the drive	・Check if short-circuit on the encoder cable wiring ・Consult HCFA distributor if have not been improved	Reset

9.3 Troubleshooting

When no alarm occurs, confirm the following items if the drive does not operate and the motor does not rotate.

Figure 9.3.1

Status	Description	Reference items
Troubleshooting 1 No display on setting panel	Switch on the control power supply (24V DC), but on any display 「 」 on the setting panel.	Table 9.3.1
Troubleshooting 2 Servo not ON	Even though 「 」 is displayed on the setting panel, the servo cannot start.	Table 9.3.2
Troubleshooting 3 Motor cannot rotate	The servo is ON, but the motor will not operate.	Table 9.3.3
Troubleshooting 4 Motor operation not steady	The motor operates unsteadily.	Table 9.3.4
Troubleshooting 5 Vibration and sound	Vibration and sound occurs when the motor operates.	Table 9.3.5

■Troubleshooting 1 (No display on setting panel)

Switch on the control power supply (24V DC), but on any display of 「 」 on the setting panel.

Table 9.3.1

Cause	What to do
The user I/O connector is not connected to 24V	Connecting 24V DC to the user I/O connector.

DC.	Pin1 and 3 is connected to 24V DC. Pin2 and 12 is connected to GND.
The user I/O connector loosens.	Check the connection and make sure it's OK.
24V DC voltage drops.	Check the capacity of 24V DC.
Drive itself failure.	Consult with CCSERVO Corporation.

■Troubleshooting 2 (Servo not ON)

Even though 「 」is displayed on the setting panel, the servo cannot start.

Table 9.3.2

Cause	**What to do**
There is no servo ON(SVON) signal input.	Input SVON signal of host control device to the user I/O connector.
Alarm No.15 occurs. There is no 200V AC input.	Make sure CHARGE LED is ON. If not, check if the 200V AC input connector(L1/L2) is loosen or the 200V AC is output or not.
Alarm No.15 occurs. There is no main circuit power input in multi-axial drive.	Connect the main circuit power supply.
The motor power output connector (U/V/W) loosen.	Check the connection and make sure it's OK. Make sure if it's connected in accordance with the connector installing method in the user's manual.
Drive itself failure.	Consult HCFA Corporation distributor

■Troubleshooting 3 (Motor cannot rotate)

The servo is ON, but the motor will not operate.

Table 9.3.3

Cause	**What to do**
Wrong parameter setting.	For setting all the basic parameters in all control modes, refer to chapter 8 「Table 8.2.4, Table 8.3.2, Table 8.4.2 and Table 8.5.2」.For position control mode and internal position command mode, refer to 「Appendix 2 SV-E3 Positioner function」.
The connection of user I/O connector is not correct.	For correct connection, refer to 「Figure 8.2.1, Figure 8.2.2, Figure 8.2.3, Figure 8.3.1, Figure8.4.1 and Figure 8.5.1」. .For position control mode and internal position command mode, refer to 「Appendix 2 SV-E3 Positioner function」.
Command input is restricted.	Disconnect the HOLD and COM- of user I/O connector.
Torque command limit setting is not correct.	Set parameter No.147.0 and 148.0 correctly when using torque command limit.
CCW/CW drive restriction input becomes effective.	Set the parameter No.67.0 to 「0」 when not using CCW/CW drive restriction input. CCWL, CWL and COM- of user I/O connector should be closed when using CCW/CW drive restriction input.

■Troubleshooting 4 (Motor operation is not steady)

The motor operates unsteadily.

Table 9.3.4

Cause	What to do
FG and GND connection is wrong.	Connect FG and GND correctly.
Speed and position command is not steady.	Check the contact of cables and connectors.
Misadjustment	Adjust the parameters.
The motor rotate without host command input.	Set the appropriate values for No.33.0 「Pulse train command - Input filter selection」in position control mode. Adjust parameter No.60.0 「Analog speed command - Fixed offset value」 in speed control mode. Adjust parameter No.300.0 「Analog torque command Fixed offset value」 in torque control mode.
Command is interfered.	The shielded twisted-pair cable is used for I/O cable in a vulnerable environment. So is the encoder cable. The encoder cable should be 20m or less.
Position deviation occurs.	Set the appropriate values for No.33.0 「Pulse train command - Input filter selection」in position control/pulse train command mode. Check whether the pulse output of host control device (such as PLC) is beyond the limit value. Check whether the product of ①No.33(Pulse command input(position) and host control device output, ②No.65(Position command) and No.67(Position feedback), ③No.67 and parameter No.276.0/278.0(Encoder pulse output division and multiplication) is consistent with the position feedback of host control device. If inconsistent, it may be interfered. Then connect FG correctly and adjust parameter No.33.0. Please use shielded twisted-pair for I/O cable.
Deviation occurs when home position reset.	Check the command input of host control device. Check whether to get the Z-phase correctly from the host control device. If the Z-phase pulse amplitude is small, adjust No.276.0 and 278.0 「Encoder output division and multiplication」to increase the pulse amplitude.

■Troubleshooting 5(Vibration and sound)

Vibration and sound occurs when the motor operates.

Table 9.3.5

Cause	What to do
Large gain	Adjust the gain.
The machine or devices loosen.	Check the installment of motor, reducer and coupling.
Interference occurs.	Check the cables' length and shielding. The high-voltage cable(motor power cable) should be isolated from the signal cable (encoder cable).
Resonance occurs between motor and device.	Adjust position command smoothing filter at low-vibration; Adjust low-pass filter or notch filter at high-vibration.
The drive and motor do not match.	If the drive and motor do not match, clear the EEPROM parameter and change the motor models.

Appendix

Appendix 1 Recommended wire/cable

Cable name	AWG	UL	Heat-resistance	Remark
Motor power cable (750W or less)	18	2517	105℃	
Motor power cable (1KW or less)	14 Note 1)	2501	105℃	
200VAC input (750W or less) FG cable Note 2)	18	1015	105℃	
200VAC input (1KW or more) FG cable Note 2)	14 Note 1)	1015	105℃	
Encoder	Power：22 Signal：24	20276	80℃	Max.20m for shielded cable of 5P(10 cores) (when using shielded twisted-pair cable)
User I/O	26	1007	80℃	Shielded twisted-pair cable Recommended length: 50m or less
Regenerative resistor connection	18	1015	105℃	
Brake	18	2517	105℃	1P(2 cores)
Main circuit DC power (750W or less) Note 2)	18	1015	105℃	
Main circuit DC power (1KW or more) Note 2)	14 Note 1)	1015	105℃	
Communication between the drives Note 2)	28	20539	80℃	Ribbon cable 10 cores Accessories ((2.54mm spacing)

The length of cable depends on the actual situation.

Note 1) AWG16 cable can be used for 1kW motor.

Note 2)For multi-axial drives

Appendix 2 SV- E3 positioner function

1. Overview

This product has the positioning function of using point table.

Preset the data by the point table in the drive and set the Point No. to be started through I/O input by the upper controller. After inputting the start signal, the positioning will be done according to the selected Point No.

2. Basic setting [2.1 User I/O connector (CN1) wiring]

Table 2.1 User I/O connector CN1 connector pins arrangements

Name	Symbol	Pin No.	Signal name	Contents
User I/O ●24V power supply input ●Parallel I/O	CN1	1	24V	Drive control power supply 24V input
		2	G24V	Drive control power supply GND
		3	COM+	I/O power supply 24V input
		4	I 1	(SVON) Servo ON input
		5	I 2	(RESET/PCLR)Alarm reset/ deviation counter clearing

●Pulse train Command input ●ABZ output				input
		6	I 3	(PCSTART1)CW start input
		7	I 4	(PCSEL1)Point NO. 1 input
		8	I 5	(PCSEL2) Point NO. 2 input
		9	I 6	(PCSEL3) Point NO. 3 input
		10	I 7	(PCSEL4) Point NO. 4 input
		11	I 8	(ORG)Home position sensor input
		12	COM-	I/O power supply GND
		13	O1	(MBRK) Brake release output
		14	O2	(SERVO) Servo status output
		15	O3	(MEND)Action completion output
		16	O4	(HEND)Home position return completion output
		17	O5	(T-LIMIT) Torque limit output
		18	O6	(OCZ)Encoder Z-phase output (open collector)
		19	O7+	(SRDY+) Servo ready output +
		20	O7-	(SRDY-) Servo ready output -
		21	O8+	(ALM+) Servo alarm output+
		22	O8-	(ALM-) Servo alarm output-
		23	NC1	Reserved (Disconnected)
		24	SP1	Reserved
		25	SP2	Reserved
		26	CMD_PLS	Reserved
		27	/CMD_PLS	Pulse command Pulse, orthogonal phase difference A-phase, CCW
		28	CC-P	Pulse command 24V of PLS
		29	CC-D	Pulse command 24V of DIR
		30	CMD_DI R	Reserved
		31	/CMD_DI R	Pulse command Direction, orthogonal phase difference B-phase, CW
		32	A SPEED	Reserved
		33	A_GND	Reserved
		34	A_TRQ	Reserved
		35	A_GND	Reserved
		36	OUT_A	Encoder A phase output
		37	/OUT_A	Encoder /A phase output
		38	OUT_B	Encoder B phase output
		39	/OUT_B	Encoder /B phase output

		40	OUT_Z	Encoder Z phase output
		41	/OUT_Z	Encoder /Z phase output
		42	SG	Signal ground
		43	485	RS-485 communication data
		44	/485	RS-485 communication /data
		45	SG	Signal ground
		46	NC2	Reserved(Disconnected)
		47	SP3	Reserved
		48	SP4	Reserved
		49	EDM+	Reserved
		50	EDM-	Reserved

[2.2 Basic parameters setting]

Set the basic parameters.

The following parameters must be set if using the positioning function.

Table 2.2 Parameter of control mode change

Parameter No.	**Parameter**	**Description**
2.0	Select control mode.	Set to “0”.
3.0	Select command mode.	Set to “3”.

Selection method for different operation modes.

Table 2.3

Operation modes	**Internal position command Selection of operation modes （No. 642. 0）**	**Selection of operation modes (No. 9. 0）**	**Starting method**
Point table	0	0	I /O input（PCSTART1）
Manual pulse input	2	Arbitrary	I /O input（pulse command input）

[2.3 User I/O description]

The user I/O related to the positioning function are shown below.

■Input

ON when connection with COM- is close; OFF when open.

1) PCSEL1. . . 4 Point NO. selection

・Specify the Point No. and home position return to be started

・Select home position return or Point No.0 for starting Point No.0 according to the setting 「Point No.0 function selection」（No. 646. 3）.

Table 2.4

PCSEL4	**PCSEL3**	**PCSEL2**	**PCSEL1**	**Description**
OFF	OFF	OFF	OFF	Home position return or Point No.0
OFF	OFF	OFF	ON	Point No.1
OFF	OFF	ON	ON	Point No.2

OFF	OFF	ON	ON	Point No.3
---	---	---	---	------
OFF	ON	ON	ON	Point No.7
---	---	---	---	------
ON	ON	ON	ON	Point No.15

2) PCSTART1 CW start

・The action and home position return of Point No. can be specified when the connection with COM- from OFF to ON.

・When set the 「Point No.0 function selection」（No. 646. 3）to "0= Return to home position" and specify 0 to the Point No., the home position return can be started by inputting PCSTART1.

3) ORG home position sensor

・Input the home position sensor signal at home position return by home position sensor.

For details, refer to 「8. 9 Home position return」.

4) HOME position return start

・Set the input signal of "Position control/internal generation command dedication 1" to the special I/O. About the special I/O setting, refer to 「Appendix 3 SV-E3 special I /O setting」.

・The home position return starts when the connection with COM- from open-circuit to close-circuit.

■Output

ON when connection with COM- is close; OFF when open.

1) MEND completion

・If the action of Point table and home position return completed and ready for the next operation, it will become close-circuit.

・OFF when the operation from starts to pauses.

・Make sure the MEND is close-circuit before inputting PCSTART 1. The start command will be ignored when MEND is open-circuit.

・It is open-circuit at servo OFF.

2) HEND home position return completion

・Close-circuit when home position return completed

・When the command method is absolute, home position return must be done if HEND is open-circuit.

・For details, refer to 「8. 9Home position return」.

3) P M1. . . 3 Point No. output

・Set the input signal of "Position control/internal generation command dedication 1" to the special I/O. About the special I/O setting, refer to 「Appendix 3 SV-E3 special I /O setting」.

・Point No. that output starts or ends

・Select the Point No. output time and description in 「Point No. output method」（No. 644. 0）.

・Open-circuit (Point NO.0) at servo OFF and home position return after power ON to the drive.

Table 2.5

PM3	**PM2**	**PM1**	**Description**
OFF	OFF	OFF	Point No.0 and 8
OFF	OFF	ON	Point No.1 and 9
OFF	ON	OFF	Point No.2 and 8
OFF	ON	ON	Point No.3 and 7
---	---	---	---
ON	ON	ON	Point No.7 and 15

The running operation and dwell time of Point NO. output in 「Point No. output method」 are shown below.

Table 2.6

Point No.	Running operation	Dwell time
1	Continuous	0
2	Continuous	0
3	Single	Arbitrary value

3. Point table operation

[3.1 Point table data]

The Point table setting are shown below.

Table 3.1 Point table data

Items	Description	Unit	Setting range
Command method	Absolute value: Take the position data as the target position Relative value: Take the travel distance from current position to target position as the position data	-	Absolute value and relative value
Running operation	Single: Executing the selected one Point No. Continuous: Execute the next Point No. continuously	-	Single, continuous
Position	1)Select absolute value according to command method Set the target position 2) Select relative value according to command method Set travel distance. Positive value: CCW rotation Negative value: CW rotation	[Command unit]	-1, 073, 741, 823 ～ 1, 073, 741, 823
Speed	Set the motor speed at positioning. And the setting value must not be outside the max. speed of the motor.	[rpm]	1~ max.speed of the motor
Acceleration time	Set the acceleration time for the motor, that is the time from 0rpm to 1000rpm	[ms/ 1000rpm]	0～5000
Deceleration time	Set the deceleration time for the motor, that is the time from 1000rpm to 0rpm	[ms/ 1000rpm]	0～5000
Dwell time	Set the dwell time for pause after the positioning completion has been detected by Point no. positioning completion (range). Execute the position command for the next Point No. after the dwell time. When set the running operation to 「Continuous」,the dwell time is 「0」 and the next Point No. continues.	[ms]	0～20, 000
Positioning completion	Set the position deviation value to determine positioning completion. The dwell time begins after the position command completed specified by the Point No. and the position deviation is within the setting range. The unit is same to the encoder pulse unit.	[pulse]	0～32, 767
Valid/ invalid	Set the valid or invalid to the operation. When set the operation to invalid, the Point No. will not execute until the next valid Point No.	-	Valid/ invalid

[3.2 Command unit setting]

The command unit is the unit used for position and distance between upper controller and drives. The mini. Command unit is 1. The function of command division and multiplication is to change the position data from command unit to encoder pulse unit. Set the command division and multiplication by「command division and multiplication（Numerator）」No. 34. 0）and 「command division and multiplication（Denominator）」No. 36. 0）. Save the parameters if the command division and multiplication changes

and execute the home position return after the power ON again.

Make sure the range for the ratio of command division and multiplication is 1 to 1000. (In pulse command mode, the range is 0. 001 to 1000).

[3.3 Operation range for position and position command overflow detection]

The operation range for position (ABS position command) of Point table:

Absolute position: -1, 073, 741, 823～+1, 073, 741, 823 [command unit]

Whether the「Position command overflow/ home position return failure」alarms or not, after the position of Point table (ABS position command value) exceeds the range described above, can be selected by「Internal speed command - Overflow detection option」(No. 643. 0). When set it to "0=Disable", the absolute value cannot be specified to the command method. For details, refer to「Parameter description Internal speed command - Overflow detection option」.

[3.4 Parameter description]

No.	Name	Unit
642. 0	Internal speed command - Operation mode	-

Set Operation mode for internal position command.

0 = Point Table

1 = Communication operation

2 = Manual pulse input

No.	Name	Unit
643. 0	Internal speed command - Overflow detection option	-

Enable/Disable Internal position command Overflow detection function

0 = Disable

1 = Enable (Initial setting)

The function of Internal speed command - Overflow detection option is to prevent the target position of Point table and communication operation(test run) exceeding the absolute position range to make the absolute position disappear. If the target position (ABS position command value) exceeds absolute position range（-1, 073, 741, 823～+1, 073, 741, 823）, here can be set for「Position command overflow/ home position return failure」to alarm or not.

Set it to "0= Disable" when outside the absolute position range and have the relative position command to the same direction repeatedly.

■Conditions for alarm occurrence

1）Set to "1=Enable"

The alarm occurs when the target position of ABS position command value exceed the range of -1, 073, 741, 823～+1, 073, 741, 823.

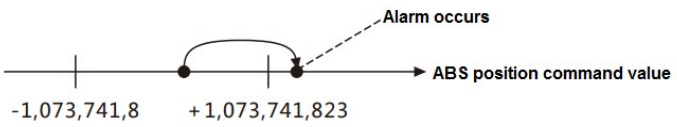

The alarm occurs when the ABS position command value exceeds the range of -1,073,741,823 to +1,073,741,823 after servo On and the travel distance exceeds the range of -2,147,483,647 to +2,147,483,647.

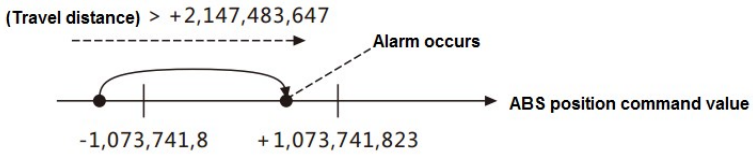

2）Set to "0=Disable"

In the relative command, no alarm occurs even if the ABS position command value exceeds the absolute position range. But alarm occurs in the absolute command.

The alarm occurs when “Absolute value” exist in the command method of Point table.

■Time for alarm occurrence

No alarm occurs when the ABS position command value exceed absolute position range at servo ON.

The alarm occurs when the operation starts in a single operation setting.

In the continuous operation setting, after the operation starts, the alarm occurs before the Point No. of which the ABS position command value exceeds the range.

No.	Name	Unit
644. 0	Point No. output method	-

Set Point No. output method to the user I/O PM1. . . 3.

0 = Output Operation start point at Operation start

1 = Output Operation start point at Operation end

2 = Output each point No.at each operation start

For details, refer to 「2-3 User I/O description PM1. . . 3 Point No. output」

Appendix 3 SV- E3 special I/O setting

1. Preface

The parallel I/O setting changes automatically after setting the control mode and command mode for the drive.

2. Special I/O setting

The parallel I/O can be set specially based on the control mode and command mode. The setting are shown below. There is only the default I/O setting when no special settings.

[2. 1 Position control mode（pulse command input）]

As shown in Table 3.1 to set the parameters and Table 3.2 to set the special I/O.

For signal details, refer to 「8.7.1 Signal description」.

Table 3.1 Parameter setting at position control mode(pulse command input)

Parameter No.	Parameter	Description
2.0	Select control mode.	Set to “0”.
3.0	Select command mode.	Set to “1”.

Table 3.2 Special I/O setting(dedication 1) at position control mode(pulse command input)

Pin No.	Signal name	Description	Function
4	I 1	SVON	Servo ON
5	I 2	RESET	Alarm reset
6	I 3	HOLD	Command input restriction
7	I 4	PCLR	Deviation counter clearing
8	I 5	HOME	Home position return start
9	I 6	CCW	CCW drive restriction
10	I 7	CWL	CW drive restriction
11	I 8	TLSEL1	Torque limit selection 1
47	I 9	Reserved	
13	O1	MBRK	Break release
14	O2	SERVO	Servo status output

15	O3	POSIN	Positioning completion output
16	O4	Reserved	
17	O5	HEND	Home position return completion
18	O6	MEND/T-LIMIT	Operation completion/ torque limit
19	O7	OCZ	Encoder phase Z output
21	O8	SRDY	Servo ready
48	O9	ALM	Alarm status

[2. 2 Position control mode（internal position command）]

As shown in Table 3.3 to set the parameters and Table 3.4 to set the special I/O.

For signal details, refer to 「8.7.1 Signal description」.

Table 3.3 Parameter setting at position control mode(internal position command)

Parameter No.	**Parameter**	**Description**
2.0	Select control mode.	Set to “0”.
3.0	Select command mode.	Set to “3”.

Table 3.4 Special I/O setting(dedication 1) at position control mode(internal position command)

Pin No.	**Signal name**	**Description**	**Function**
4	I 1	SVON	Servo ON
5	I 2	RESET/PCLR	Alarm reset/deviation counter clearing
6	I 3	PCSTART1	CW start
7	I 4	PCSEL1	Point No.1
8	I 5	PCSEL2	Point No.2
9	I 6	PCSEL3	Point No.3
10	I 7	HOME	Home position return start
11	I 8	TLSEL1	Torque limit selection 1
47	I 9	Reserved	
13	O1	PM1	Point No. 1 output
14	O2	PM2	Point No. 2 output
15	O3	PM3	Point No. 3 output
16	O4	Reserved	
17	O5	HEND	Home position return completion

18	O6	MEND/T-LIMIT	Operation completion/ torque limit
19	O7	OCZ	Encoder phase Z output
21	O8	SRDY	Servo ready
48	O9	ALM	Alarm status

Appendix 4 Servo drive power connector （L1/ L2/ B1/B2, U/ V/ W）wiring

Use the crowbar packed with the servo while wiring.

1)The crowbar is packed with the power connector at shipping

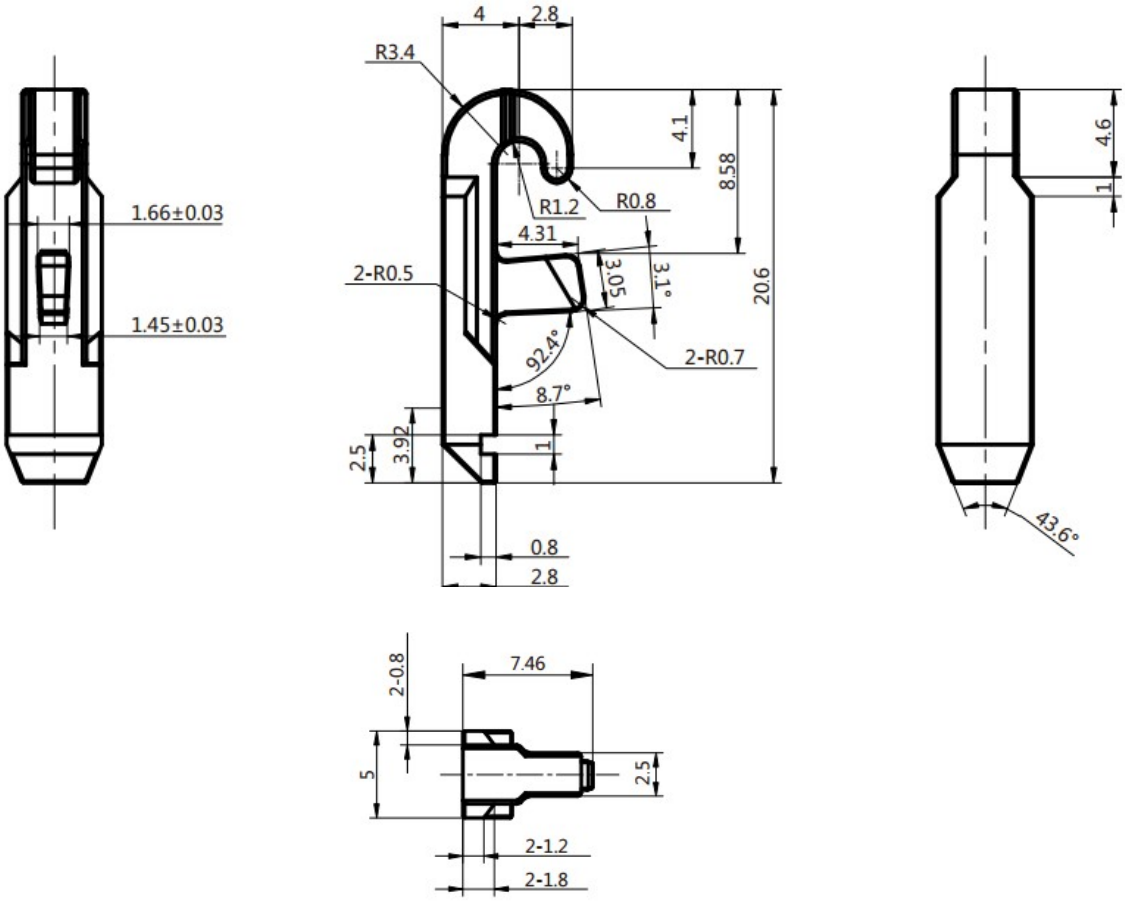

2) Cable connection procedures

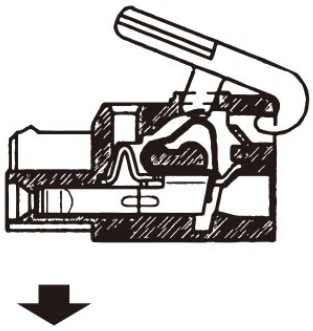

1) Attach the crowbar to the handling slot on the upper portion (removable)

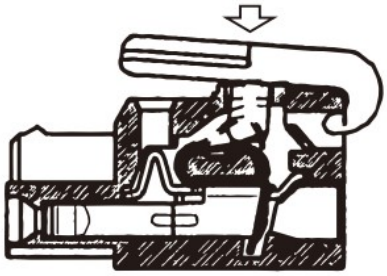

2) Press down the crowbar to push down the spring.

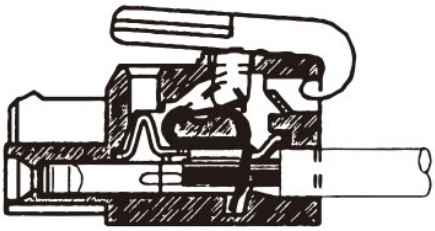

3) Insert the peeled cable while pressing down the lever, until it hits the insertion

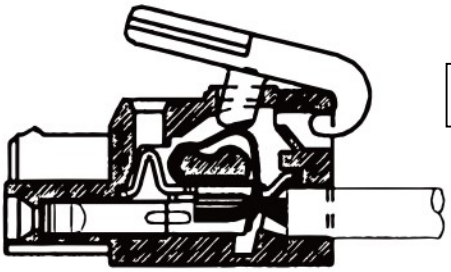

4)Release the crowbar.

Appendix 5 SV-E3 series absolute system description

1. Overview

This product constitutes the absolute system by using the unique magnetic absolute encoder. Have the encoder clearing after home position return and no need for home position return when restarting the power supply.

The following procedures are ready for the absolute system:

①Use the motor equipped with the absolute encoder and drive with absolute specifications

②Connecting the encoder battery.

③The upper controller can get the absolute data by RS-485.

2. Applicable models

Use the following motor and drive combination when using absolute system.

Table 1 Applicable motor and drive

Output	**Drive**
50W	SV-E3P005A2-A
100W	SV-E3P010A2-A
200W	SV-E3P020A2-A

400W	SV-E3P040A2-A
750W	SV-E3P075A2-A
1KW	SV-E3P100A2-A
1.5KW	SV-E3P150A2-A
2KW	SV-E3P200A2-A

3. Setting

[3.1 Setting for absolute system]

■Parameter setting is needed for absolute system of the drive.

■Change the Selection of an encoder system (No.257.0) from 0 (initial setting, incremental system) to “1(absolute system). This can be set by the set panel.

■Refer to 「5 Absolute encoder initialization」 for the operation procedures.

[3.2 RS-485 communication setting]

Parameter setting must be done for the upper controller to get the absolute data of the drive by RS- 485 communication.

Change the Communication address (No.4.0) from “1(initial value) to the desired address No and the setting range is 1 to 32.

Change the Selection of host communication method(No.8.0) from “0(initial value” to “1(485 asynchronous serial communication). The parameter change can be done by the set panel.

Refer to 「5 Absolute encoder initialization」 for the operation procedures.

Table Parameter setting

No.	**Parameter**	**Description**	**Whether to restart the 24VDC power**
4.0	Communication address	Set the communication address of servo drive. Set to “1” when not the multi-station communication. If using multi-station communication, set different values for each axis. [Initial value] 1 [Setting range] 1 to 32	Yes
8.0	Selection of host communication method	Select host communication mode. 0= Disable 1= RS-485 asynchronous serial communication When connecting RS-485 signal cable and using RS-485 asynchronous serial communication, select to “1”. If not, select to “0”. When use USB, it is irrelevant to this setting and can communicate anytime. [Initial value] 0 (Disable) [Setting range] 0 or 1	Yes
257. 0	Selection of an encoder system	Select an option for Absolute system or Incremental system. 0 = Incremental system 1 = Absolute system [Initial value] 0 (Incremental system) [Setting range] 0 to 2	Yes

4 The installation of battery box cable(Optional)

[4.1 Installation of battery box cable]

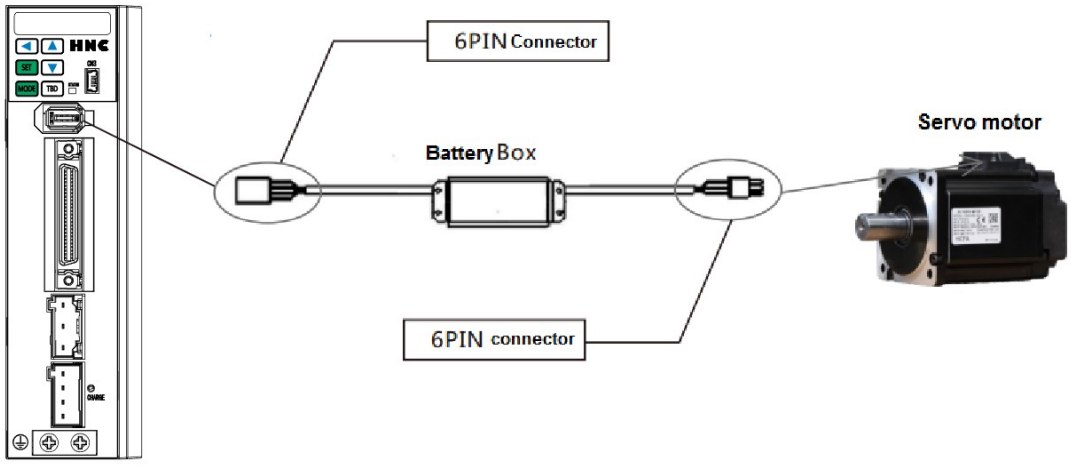

Figure 1 Installation of battery box cable

Install the battery box on the cable between the drive and motor encoder.

①Cut off 200VAC and 24VDC, take off the encoder cable from the motor

②Connect the battery box after check the connection direction

③Operate as the「5 Absolute encoder initialization」

[4.2 Battery specification]

The battery for absolute system are recommended as below:

Table 3 Basic specifications(recommended battery)

Items	**Description**	**Remark**
Battery	CR-AGB/C23P	Made by Panasonic Note 1) Series : CR-AG
Nominal voltage	3. 0V	
Nominal capacity	2400mAh	Capacity at the temperature of 20℃, standard discharge current, voltage 1.8V
Standard discharge current,	2. 5mA	
Max. continuous discharge current	1A	At the temperature of 20℃
Appearance	As shown in the <Appearance>	Note 2)
Weight	24g	
Temperature	Working temperature：-40℃ ～ +70℃ Storage temperature：-20℃ ～ +45℃	No condensation
Recommended storage condition	Temperature：5℃ ～ 35℃ Humidity：70%RH or less	

Note 1) Primary lithium battery. Do not charge to avoid the burst.

Note 2) No significant appearance damage and have the obvious identification.

<Appearance>

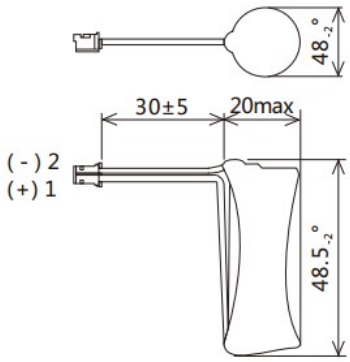

Figure 2 Recommended battery

[4.3 Battery box wiring]

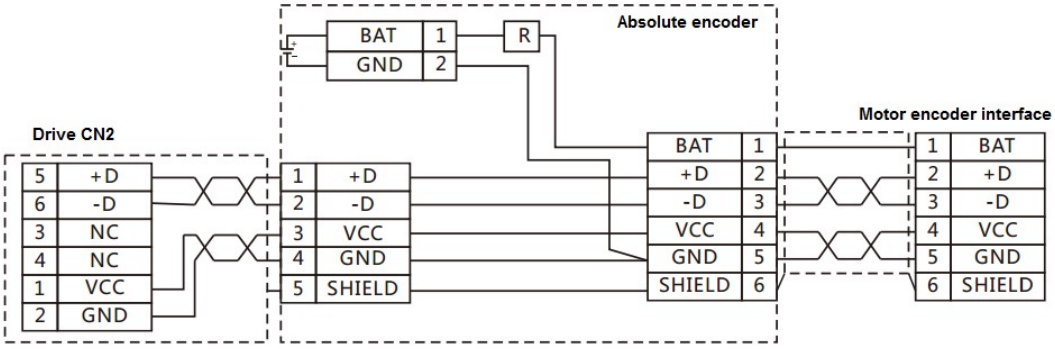

Figure 3 Battery wiring

< When you make your own cable for absolute encoder >

⚠ Caution		
❗	Please use the battery recommended by our company. Wire correctly.	To avoid the electric shock, injury, malfunction or damage.

Please follow the wiring diagram as above. End user prepare the connectors and cables.

The batteries recommended by the company must be used. Using the battery, which does not meet the specifications, may damage the battery in the worst situation.

For the operating and storage location

・Indoors, free from rain and direct sunlight

・Free from the corrosive gas, oil mist, iron powder

・Good ventilation, no moisture

・No excessive pollution and dust

・No vibration

・No impact to the battery

[4.4 Battery change]

When the battery voltage is too low, the alarm occurs.

At this time, it is necessary to change the battery, which should be done under the condition that the 24V control power for the servo drive is ON. If not, the multi-rotation data will be lost and need to operate the mechanical home position return once again.

⚠ Caution		
⃠	・Check the polarity of the battery ・Do not disassemble the battery	To avoid the electric shock, injury, malfunction or damage.

	·Do not short-circuit the battery ·Do not charge the recommended battery	

5 Absolute encoder initialization

Absolute encoder initialization is the encoder clearing. This can be done by the set panel . After encoder clearing, switch off the 24VDC power. The multi-rotation data has been cleared after switch on the control power again.

[5.1 Method for encoder clearing by set panel]

1) Change the drive parameters(set absolute system and RS-485 communication)

1. Turn on 24VDC power when not connected with the encoder. Change the parameters if no alarm occurs.
2. Change the Parameter No.4.0 Communication address from “initial value 1” to the expected communication address No. . The setting range is from 1 to 32. Change Parameter No.8.0 Selection of host communication method from “initial value 0” to “1(RS-485 asynchronous serial communication)”. Change the parameterNo.257.0 from “initial value 0 (Incremental system) to “1(Absolute system)”. For the parameter change method, refer to SV-E3 User Manual「5-6 Parameter setting mode」
3. Refer to SV-E3 User Manual「5-8 Parameter saving mode」to save the parameters. If not save the parameters, the changed parameters will be invalid when power ON next time.
4. Switch off the control power (24V).

2) Restart the power

1. Refer to「4-1 Battery box cable installation 」to connect the battery box to the encoder and turn on the control power.
2. When restart the control power, the encoder error (Err. 18) will display on the set panel. Simultaneously, the multi-rotation data error (Er r . 20) and encoder low-voltage error occur (Err. 21).

3) Move to the home position

Move the axis which does not set the home position to the home position. When moving to the home position by manual is possible, move it to the home position. This should be done at servo ON. Move them around the home position and perform the operation of 4) to 6), then 4) to 5).

4) Operating the encoder clearing by set panel

1. Make the panel display SubFnc . When display Err. 18, press the MODE(MODE) button for seven times.
2. Refer to the following figure to press the SET (SET) button once and UP(▲) button once to display F_ECLR.
3. Press the SET(SET) button to display ECLR -.
4. After long-press the LEFT(◄) button to show 『ECLR -』→『------』, FinSh displays and the multi-rotation data become 0.
5. Switch off the control power. Until now, the absolute encoder initialization has been completed.

The operation procedures to have the encoder clearing by set panel are shown blow.

Operate the encoder clearing at servo OFF. If servo ON, the alarm Error. will occur.

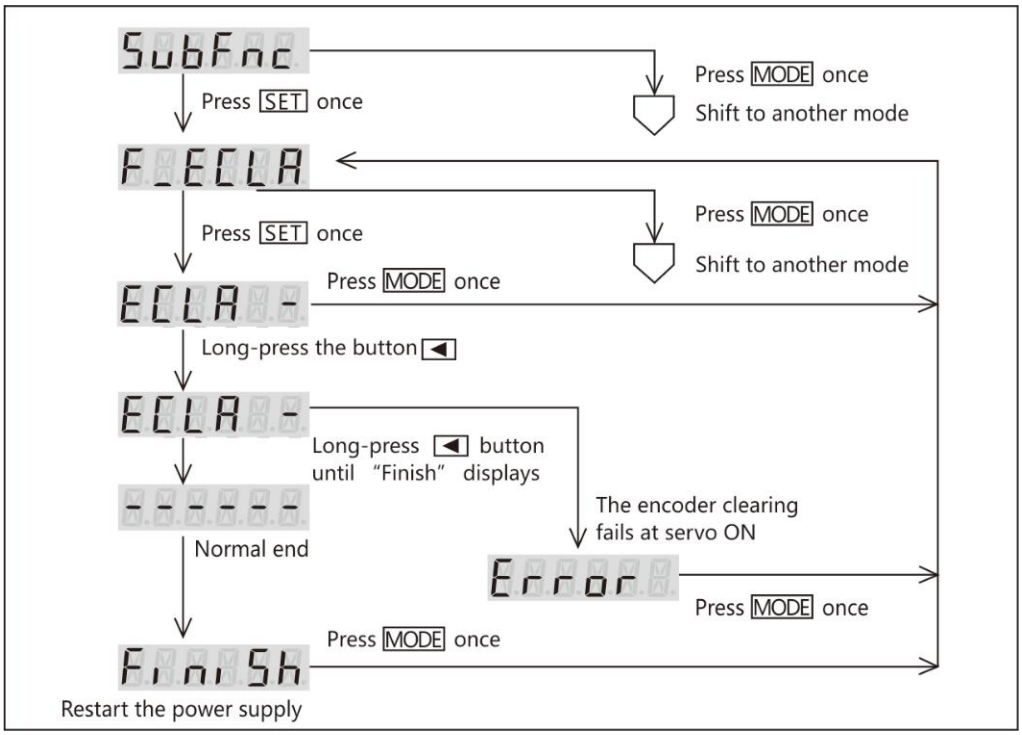

Figure 4 Operation procedures by set panel

5) Check if the encoder clearing succeeds

1. Turn on the control power

2. No alarm occurs and display. No need for home position return even though switch off the power, unless remove the battery.

3. Check the following items if alarm occurs.

★Install the battery or not.

★The battery voltage is normal or not.

★Cable connection is correct or not.

★Wiring is correct or not

After check the items above, do the 3) operation.

4. When determine the home position by manual, the absolute encoder setting completes. When the servo drive determines the home position, after performing 6) operation procedures, then 4) and 5). The setting completes.

6) The servo drive moves to the home position(cannot move to the home position by manual)

1. The drive moves to the home position at servo ON. Please note that the current absolute data will change as the encoder clearing will be done later.

2. Servo OFF. The alarm of will occur at servo ON.

3. The absolute encoder setting completes after operation procedures of 4) and 5).

6) The servo drive moves to the home position(cannot move to the home position by manual)

1. The drive moves to the home position at servo ON. Please note that the current absolute data will change as the encoder clearing will be done later.

2. Servo OFF. Cannot select [Encoder clearing] at servo ON.

3. The absolute encoder setting completes after operation procedures of 4) and 5).

6. Method of obtaining absolute data

The upper controller device can get the absolute data from the drive by RS-485 communication.

[6.1 Wiring for RS-485 communication]

Refer to 「4. 4 RS-485 communication 」for RS-485 communication wiring.

[6.2 About the communication between the upper controller and servo drive]

The upper controller device send communication command GET_STATE_VALUE_4 to read the encoder data by RS-485 communication. This communication command read the state value in 4 bytes.

STEP1) GET_STATE_VALUE_4 Send command

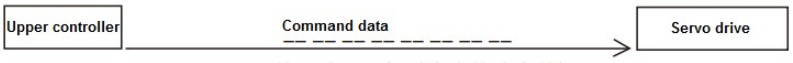

STEP2) G ET_STATE_VALUE_4 Answer the response data to the command from the drive

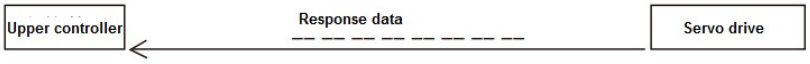

[6.3 Communication command description]

The absolute data are recorded by “Encoder/ rotor mechanical angle (integrate)”. The upper controller device get the “Encoder/ rotor mechanical angle (integrate)”, that is the absolute data, from the communication data GET_STATE_VALUE_4. The sending and receiving method are shown in the following data example. Take the communication address (target address) “01” as the example.

1. Execute the communication command GET_STATE_VALUE_4. The command code for GET_STATE_VALUE_4 is “11”.

2. The “Encoder/ rotor mechanical angle (integrate)” is used as the transmission data to input. The state variable code for “Encoder/ rotor mechanical angle (integrate)” is “00C3”.

Sending data Example: Encoder / rotor mechanical angle (integrate)

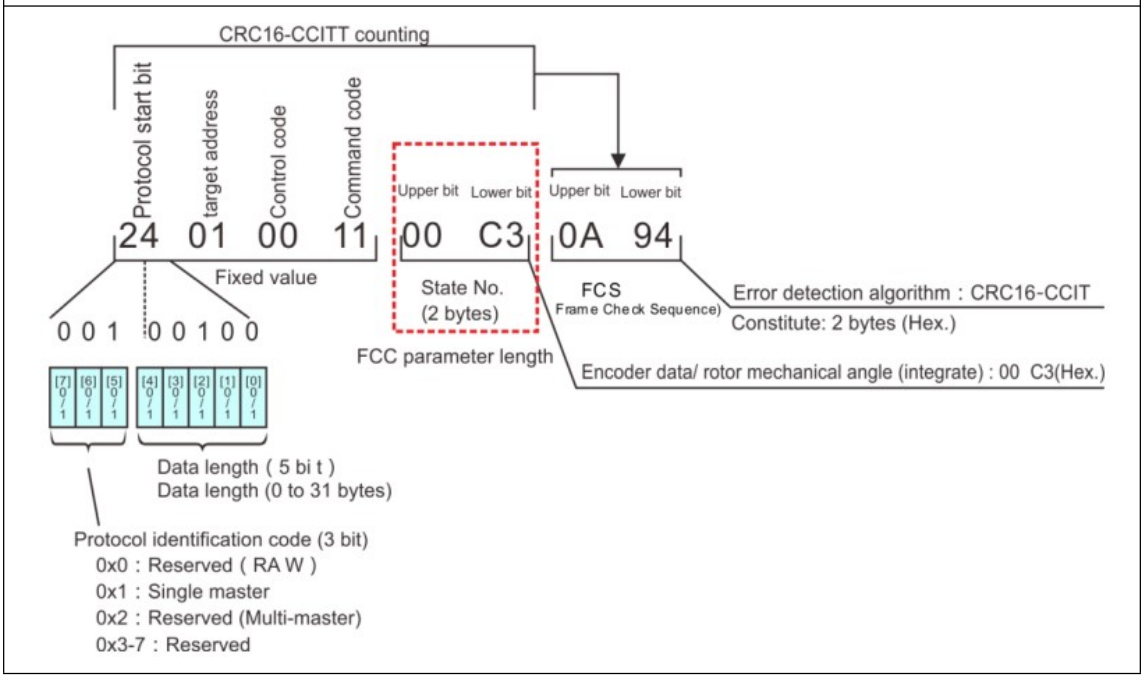

3. Receives data with the specified state number.

Example of data reception

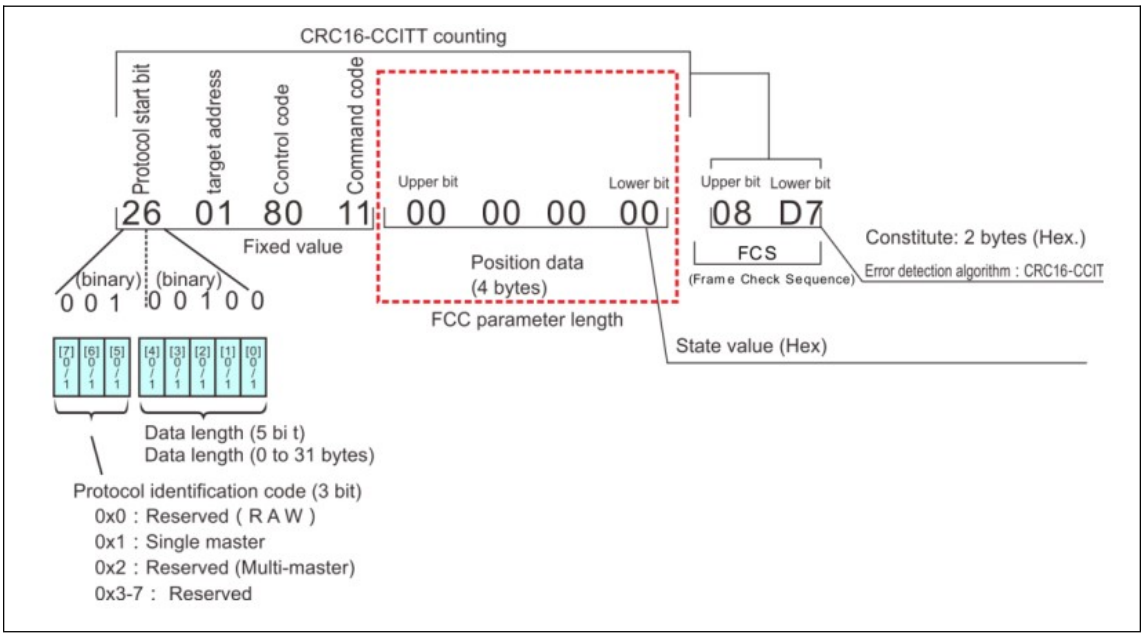

7. About alarms

The alarms in absolute system are shown below.

Relative to the incremental system alarm items, the absolute system adds the items of encoder error((Err. 18)), multi-rotation data error ((Er r. 2 0) and encoder low-voltage error(Err. 21). These alarms cannot be cleared by alarm resetting or restarting the 24VDC control power. Restart the control power supply after encoder clearing.

Check the alarms on the [State display] screen

Table 9 Check the alarms on the [State display] screen

No.	Alarm items	Description·handling ways
18	Encoder error	The encoder itself error occurs.
20	Multi-rotation data error	☆The multi-rotation data changes sharply. ☆Check the encoder cable wiring and PIN contact ☆Perform FG grounding and countermeasures such as separation of power cable and encoder cable.
21	Encoder low-voltage error	☆The multi-rotation data changes sharply. ☆Check if the battery voltage is too low for the absolute or battery cable loosen

For alarm details of the encoder, refer to the [Encoder] on the [Auxiliary function] screen.

Table 10 Alarm details for the encoder

No.	Alarm items	Description·handling ways
0	Speed error	The multi-rotation ABS sensor conversion error occurs at backup or speed error occurs at power ON
1	MR	Low battery voltage warning
2	Multi-rotation ABS	Sensor communication error, cannot get the multi-rotation data at power ON.
3	Position error	The sensor error results in the different value between the 1-rotation ABS sensor and multi-rotation ABS sensor, which unable to confirm the encoder position.
4	Low –voltage error	Only for multi-rotation ABS encoder The supply voltage is under the voltage specification described in the manual at power OFF.

5	EEPROM error	Cannot confirm the data stored in the EEPROM
6	Overheat alarm	The encoder base circuit temperature is beyond the setting temperature
7	Battery low-voltage error	The battery voltage is below the specified value (Note 1)

Note 1) Confirm the battery voltage at power ON and then check it every one hour.